会签		
建筑	结构	给排水
电力	暖通	动力

Prepare the container base:

1. Install single unit first then make combination
2. Connect the water supply pipes firstly then move to the next step

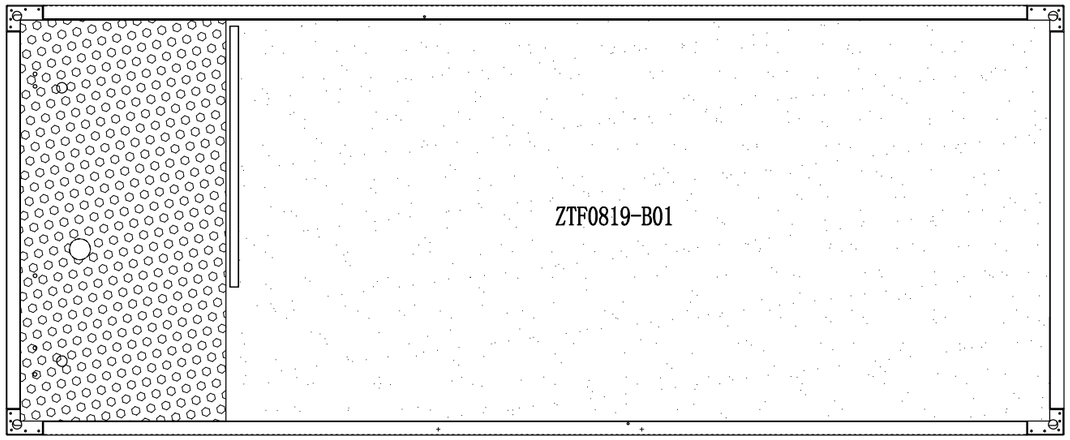

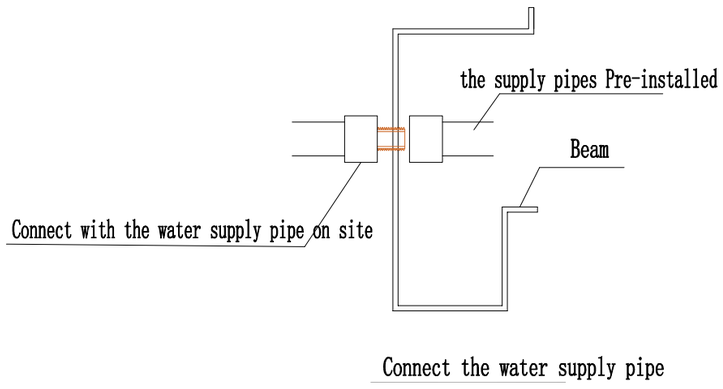

Copyright 2016.
This drawing remains the property of Hangzhou xbd Buildings Co.,Ltd, It may only be used for the purpose for which it was commissioned & in accordance with the terms of engagement for that commission. Unauthorized use of this drawing is prohibited.

CUSTOMIZED BUILDINGS

Hangzhou Xixi Building Co., LTD
Mr. Cancan Kang
Cell Phone & WhatsApp & Viber: 008613757163354
QQ & WeChat: 66048573 Email: cancancbc@qq.com
Add.: 20th Floor, Xinyi Guangchang, Xiaoshan, Hangzhou,

版本 Rev.	修改内容 Description	日期 Date	发布人 who send

证书等级	
证书编号	

合作设计单位 Cooperative Designer

工序 Process	签名 Signature	日期 Date
审定 Authorized By		
审核 Verified By		
项目负责人 Process		
校对人 Checked By		
设计 Designed By		
制图 Drawn By		

执业签章 Engineer Signature

出图签章 Engineer Signature

项目名称 Project Name

图名 Title: 箱底布置

工程编号 Title	#878	专业 Title	JZ
比例 Scale		图号 Dwg.No.	

未盖技术出图章 本图纸无效
This drawing is valid only after being stamped and released by the R&D

利用 pdfFactory Pro 测试版本创建的PDF文档 www.pdffactory.com

会签		
建筑	电力	
结构	暖通	
给排水	动力	

Install the posts:

1. sealed and fixed with glass glue in advance before fix the posts
2. Put the posts on the right position
3. Use 5 pcs M12*25 bolts to fix the posts, but do NOT tighten them before the roof installed so that can be adjusted afterwise

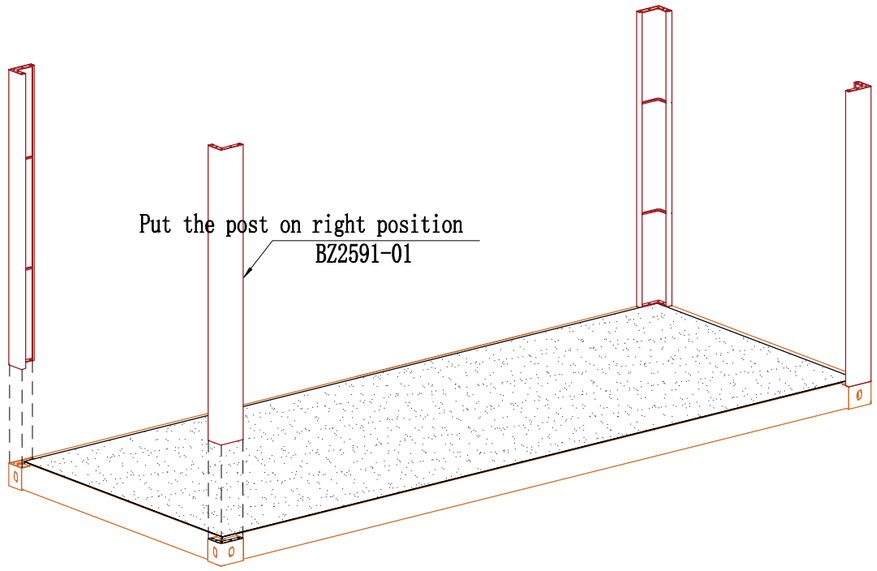

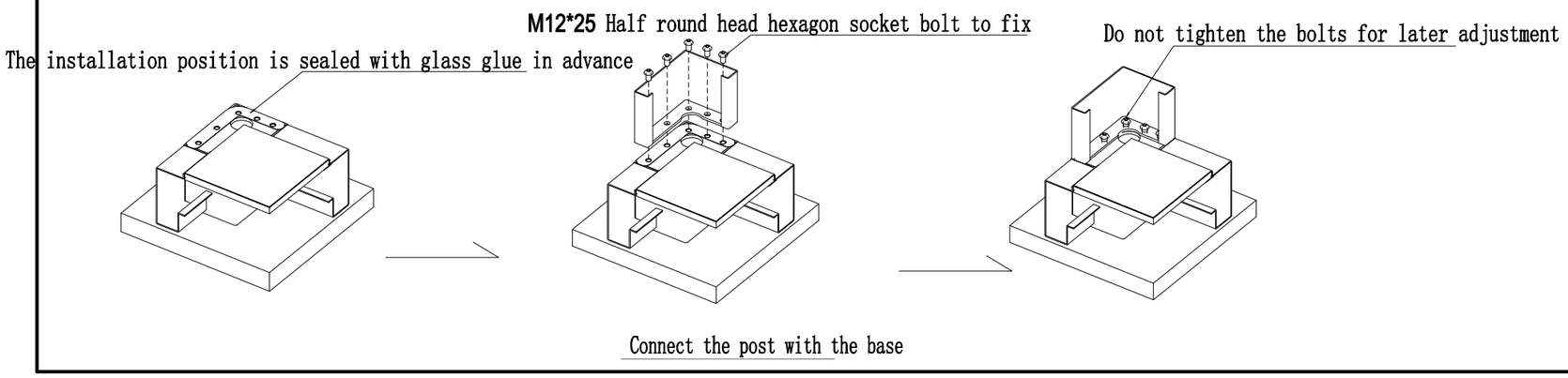

Copyright 2016.
This drawing remains the property of Hangzhou xixi Buildings Co.,Ltd, it may only be used for the purpose for which it was commissioned & in accordance with the terms of engagement for that commission. Unauthorized use of this drawing is prohibited.

CUSTOMIZED BUILDINGS

Hangzhou Xixi Building Co., LTD
Mr. Cancan Kang
Cell Phone & WhatsApp & Viber: 008613757163354
QQ & WeChat: 66048573 Email: cancancbc@qq.com
Add.: 20th Floor, Xinyi Guangchang, Xiaoshan, Hangzhou,

版本 Rev.	修改内容 Description	日期 Date	发布人 who send

证书等级	
证书编号	

合作设计单位 Cooperative Designer

工序 Process	签名 Signature	日期 Date
审定 Authorized By		
审核 Verified By		
项目负责人 Process		
校对人 Checked By		
设计 Designed By		
制图 Drawn By		

执业签章 Engineer Signature

出图签章 Engineer Signature

项目名称 Project Name

图名 Title: 立柱安装

工程编号 Title	#878	专业 Title	JZ
比例 Scale		图号 Dwg.No.	

未盖技术出图章 本图纸无效
This drawing is valid only after being stamped and released by the R&D

利用 pdfFactory Pro 测试版本创建的PDF文档 www.pdffactory.com

会签	
建筑	电力
结构	暖通
给排水	动力

Install the roof:

1. sealed and fixed with glass glue in advance before fix the posts
2. Put the posts on the right position
3. Use 5 pcs M12*25 bolts to fix the posts, but do NOT tighten them before all bolts fit correctly so that can be adjusted afterwise
4. Tighten all the bolts for base and roof

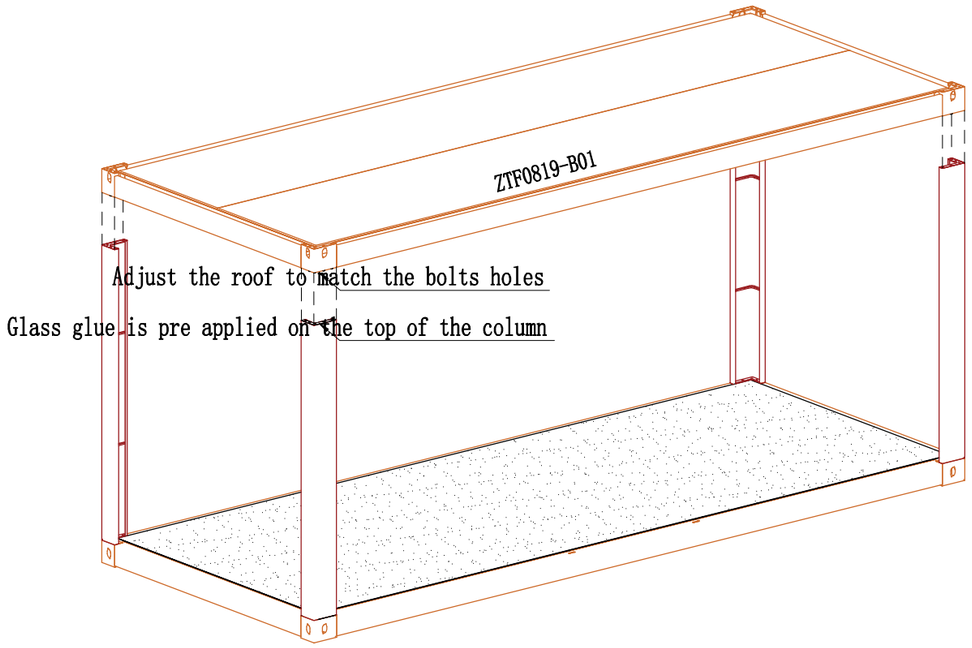

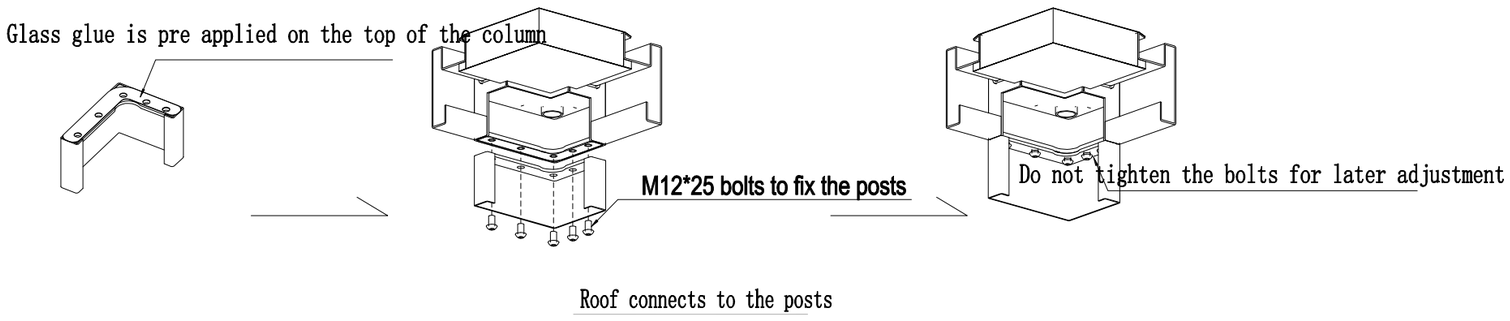

Copyright 2016.
This drawing remains the property of Hangzhou xixi Buildings Co.,Ltd, it may only be used for the purpose for which it was commissioned & in accordance with the terms of engagement for that commission. Unauthorized use of this drawing is prohibited.

CUSTOMIZED BUILDINGS

Hangzhou Xixi Building Co., LTD
Mr. Cancan Kang
Cell Phone & WhatsApp & Viber: 00861375716335 4
QQ & WeChat: 66048573 Email: cancancbc@qq.com
Add.: 20th Floor, Xinyi Guangchang, Xiaoshan, Hangzhou,

版本 Rev.	修改内容 Description	日期 Date	发布人 who send

证书等级	
证书编号	

合作设计单位 Cooperative Designer

工序 Process	签名 Signature	日期 Date
审定 Authorized By		
审核 Verified By		
项目负责人 Process		
校对人 Checked By		
设计 Designed By		
制图 Drawn By		

执业签章 Engineer Signature

出图签章 Engineer Signature

项目名称 Project Name

图名 Title: 箱顶安装

工程编号 Title	#878	专业 Title	JZ
比例 Scale		图号 Dwg.No.	

未盖技术出图章 本图纸无效
This drawing is valid only after being stamped and released by the R&D

利用 pdfFactory Pro 测试版本创建的PDF文档 www.pdffactory.com

会签	
建筑	
结构	
给排水	
电力	
暖通	
动力	

Install wall panel:

1. install the short end walls then the long side walls
2. The short side wall panels are aligned according to the center alignment and adjusted to the left and right sides after installation
3. The long side wall panel shall be adjusted according to the position of the hanging reinforcement, so as not to affect the use of the hanging reinforcement.
4. The adjusting bolts of the wallboard shall be pre tightened first, and the overall inspection and tightening shall be carried out after the wallboard is adjusted.
5. Hanging reinforcement and wallboards shall be installed alternately in sequence

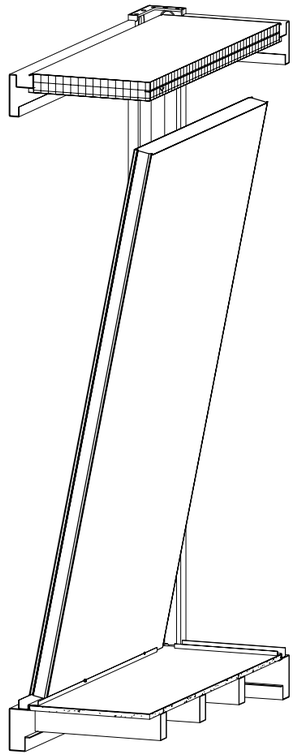

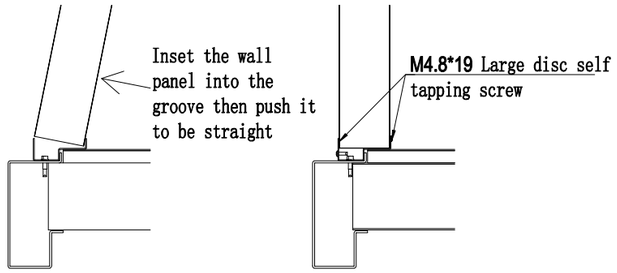

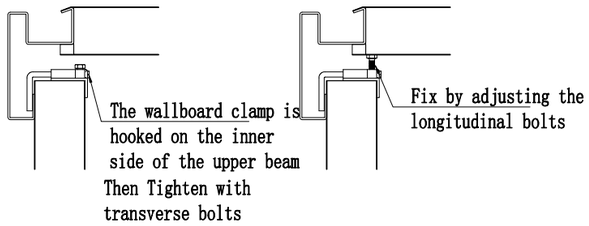

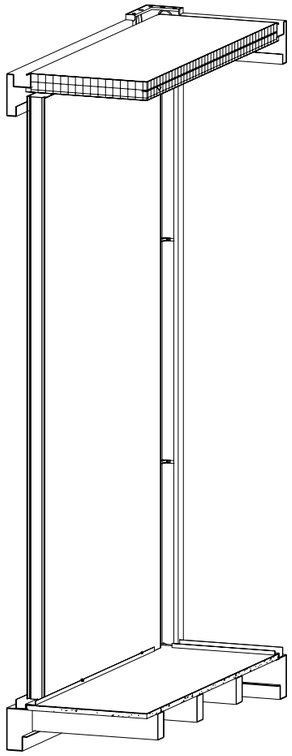

Copyright 2016.
This drawing remains the property of Hangzhou xixi Buildings Co.,Ltd, It may only be used for the purpose for which it was commissioned & in accordance with the terms of engagement for that commission. Unauthorized use of this drawing is prohibited.

CUSTOMIZED BUILDINGS

Hangzhou Xixi Building Co., LTD
Mr. Cancan Kang
Cell Phone & WhatsApp & Viber: 00861375716335 4
QQ & WeChat: 66048573 Email: cancancbc@qq.com
Add.: 20th Floor, Xinyi Guangchang, Xiaoshan, Hangzhou,

版本 Rev.	修改内容 Description	日期 Date	发布人 who send

证书等级	
证书编号	
合作设计单位 Cooperative Designer	

工序 Process	签名 Signature	日期 Date
审定 Authorized By		
审核 Verified By		
项目负责人 Process		
校对人 Checked By		
设计 Designed By		
制图 Drawn By		

执业签章 Engineer Signature

出图签章 Engineer Signature

项目名称 Project Name

图名 Title: 外Wall panel安装节点

工程编号 Title	#878	专业 Title	JZ
比例 Scale		图号 Dwg.No.	

未盖技术出图章 本图纸无效
This drawing is valid only after being stamped and released by the R&D

利用 pdfFactory Pro 测试版本创建的PDF文档 www.pdffactory.com

会签	
建筑	
结构	
给排水	
电力	
暖通	
动力	

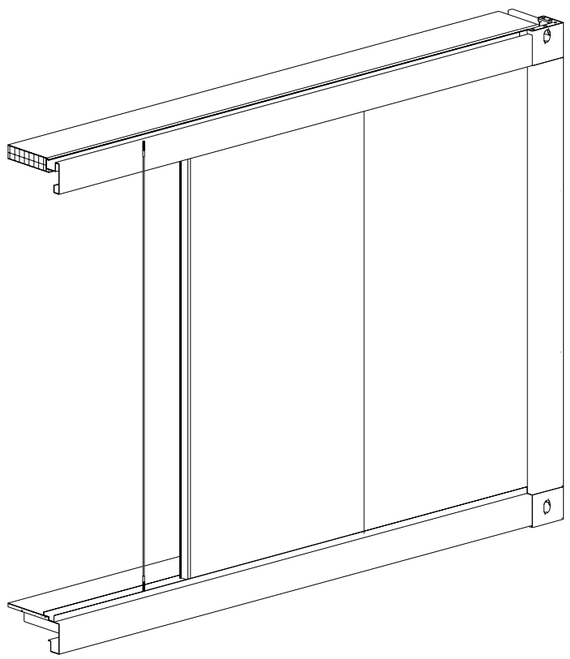

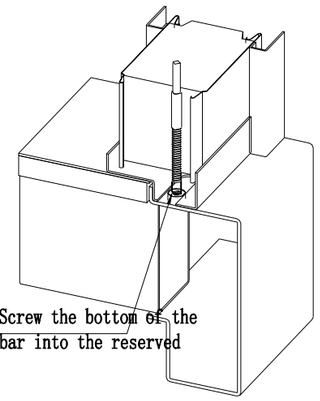

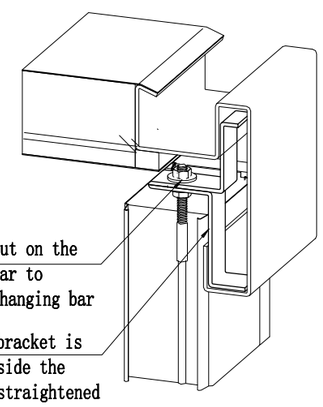

Copyright 2016.
This drawing remains the property of Hangzhou xixi Buildings Co.,Ltd, It may only be used for the purpose for which it was commissioned & in accordance with the terms of engagement for that commission. Unauthorized use of this drawing is prohibited.

CUSTOMIZED BUILDINGS

Hangzhou Xixi Building Co., LTD
Mr. Cancan Kang
Cell Phone & WhatsApp & Viber: 008613757163354
QQ & WeChat: 66048573 Email: cancancbc@qq.com
Add.: 20th Floor, Xinyi Guangchang, Xiaoshan, Hangzhou,

版本 Rev.	修改内容 Description	日期 Date	发布人 who send

证书等级	
证书编号	

合作设计单位
Cooperative Designer

工序 Process	签名 Signature	日期 Date
审定 Authorized By		
审核 Verified By		
项目负责人 Process		
校对人 Checked By		
设计 Designed By		
制图 Drawn By		

执业签章
Engineer Signature

出图签章
Engineer Signature

项目名称
Project Name

图名
Title
吊筋安装

工程编号 Title	#878	专业 Title	JZ
比例 Scale		图号 Dwg.No.	

未盖技术出图章 本图纸无效
This drawing is valid only after being stamped and released by the R&D

利用 pdfFactory Pro 测试版本创建的PDF文档 www.pdffactory.com

会签		
建筑	结构	给排水
电力	暖通	动力

Install internal wall:

1.The last external wall panel shall not be installed first to reserve space for the internal wall panel. Before installing the inner wall panel, fix the corner aluminum on the roof with rivets according to the position of the inner wall, and then clamp the first inner wall panel in the U-shaped groove and push it to one side close to the corner aluminum and the outer wall; refer to drawings below

2.After the installation of the inner wall panel, install the last external wall panel, and fix the inner wall panel with the last external wall panel with angle aluminum profile, Refer to detail-B

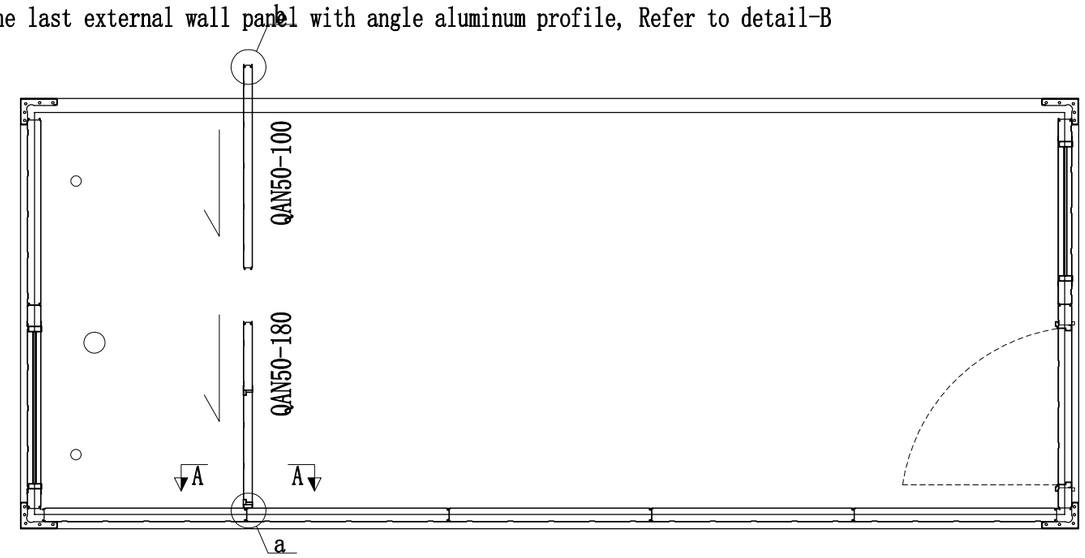

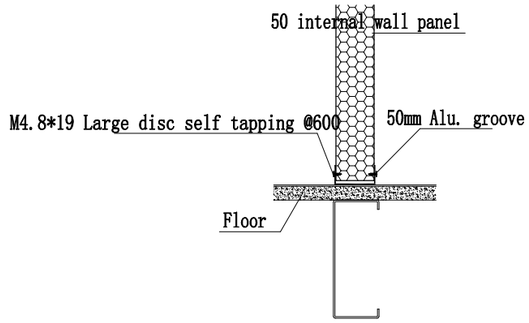

Bottom of the internal wall detail

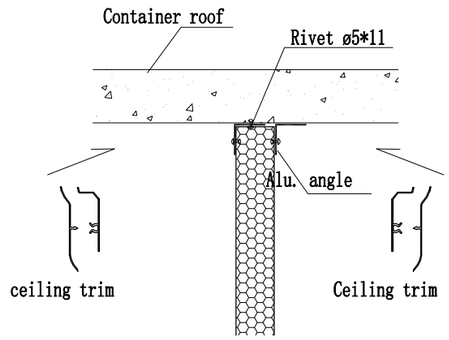

Remark: install the PVC trim after the electrical installation

Top of the internal wall installation

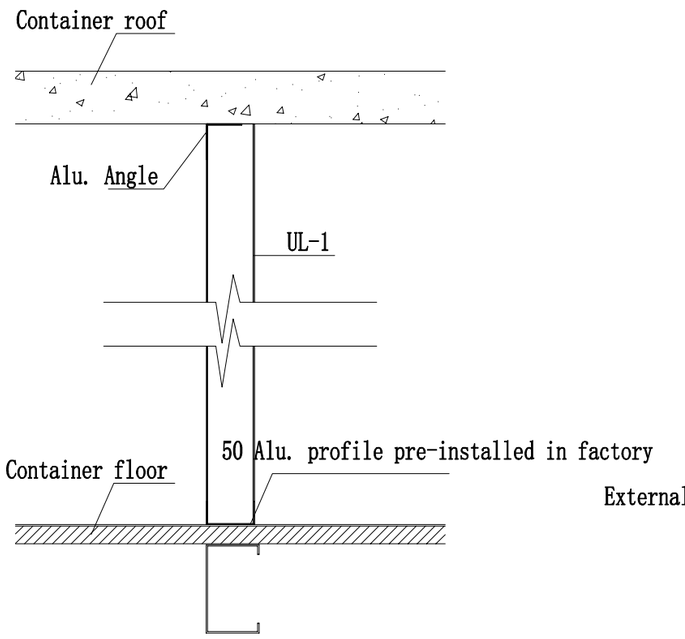

A-A

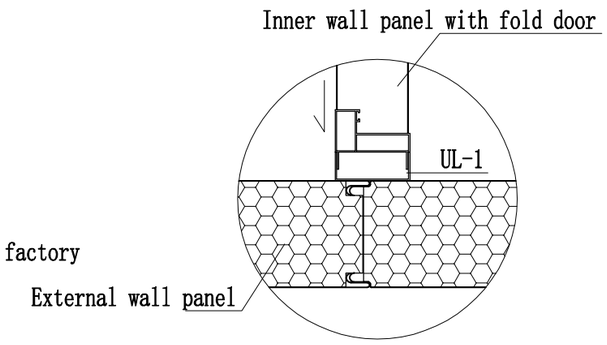

a

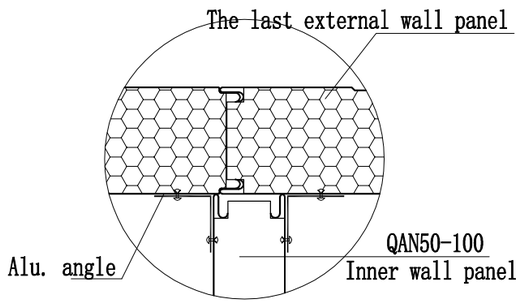

b

First fix the U-groove (ul-1) of the wall panel and the alu. angle to the roof. The aluminum groove at the bottom has been prefabricated in the factory

Copyright 2016.
This drawing remains the property of Hangzhou xixi Buildings Co.,Ltd, It may only be used for the purpose for which it was commissioned & In accordance with the terms of engagement for that commission. Unauthorized use of this drawing is prohibited.

CUSTOMIZED BUILDINGS
Hangzhou Xixi Building Co., LTD
Mr. Cancan Kang
Cell Phone & WhatsApp & Viber: 008613757163354
QQ & WeChat: 66048573 Email: cancancbc@qq.com
Add.: 20th Floor, Xinyi Guangchang, Xiaoshan, Hangzhou,

版本 Rev.	修改内容 Description	日期 Date	发布人 who send

证书等级	
证书编号	
合作设计单位 Cooperative Designer	

工序 Process	签名 Signature	日期 Date
审定 Authorized By		
审核 Verified By		
项目负责人 Process		
校对人 Checked By		
设计 Designed By		
制图 Drawn By		

执业签章 Engineer Signature

出图签章 Engineer Signature

项目名称 Project Name

图名 Title: 内墙安装

工程编号 Title	#878	专业 Title	JZ
比例 Scale		图号 Dwg.No.	

未盖技术出图章 本图纸无效
This drawing is valid only after being stamped and released by the R&D

利用 pdfFactory Pro 测试版本创建的PDF文档 www.pdffactory.com

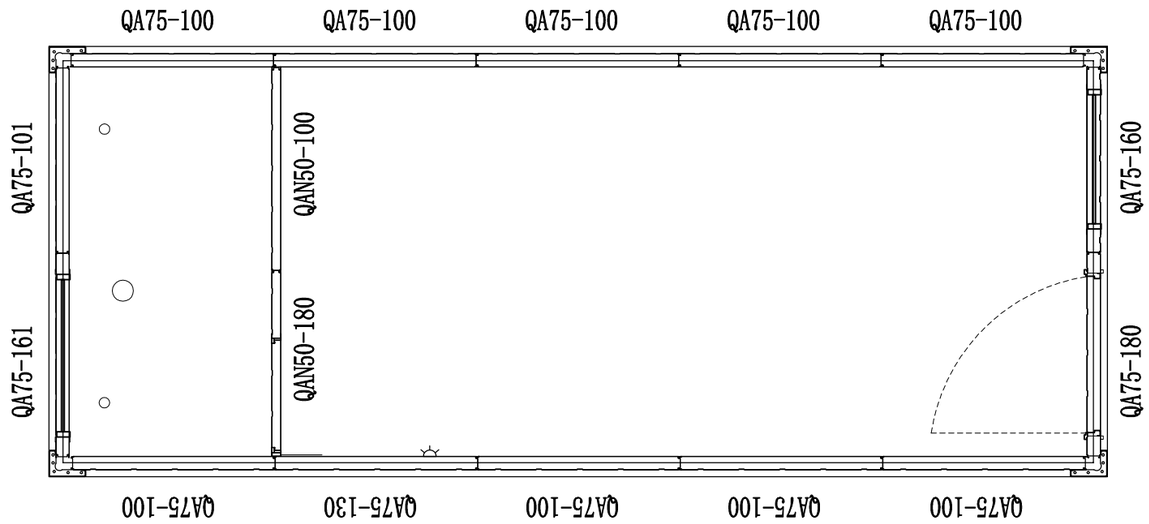

Wall panel layout

Install 75gdb-2 / 75gdb-4 at the right position according to the wall panel layout

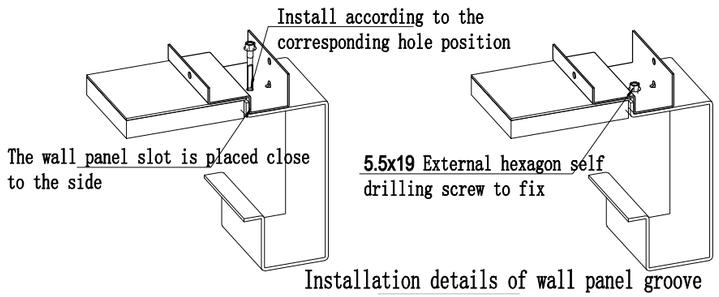

Installation details of wall panel groove

会签	
建筑	电力
结构	暖通
给排水	动力

Copyright 2016.
This drawing remains the property of Hangzhou xixi Buildings Co.,Ltd, it may only be used for the purpose for which it was commissioned & in accordance with the terms of engagement for that commission. Unauthorized use of this drawing is prohibited.

CUSTOMIZED BUILDINGS

Hangzhou Xixi Building Co., LTD
Mr. Cancan Kang
Cell Phone & WhatsApp & Viber: 008613757163354
QQ & WeChat: 66048573 Email: cancancbc@qq.com
Add.: 20th Floor, Xinyi Guangchang, Xiaoshan, Hangzhou,

版本 Rev.	修改内容 Description	日期 Date	发布人 who send

证书等级	
证书编号	

合作设计单位
Cooperative Designer

工序 Process	签名 Signature	日期 Date
审定 Authorized By		
审核 Verified By		
项目负责人 Process		
校对人 Checked By		
设计 Designed By		
制图 Drawn By		

执业签章
Engineer Signature

出图签章
Engineer Signature

项目名称
Project Name

图名 Title: Wall panel布置图

工程编号 Title	#878	专业 Title	JZ
比例 Scale		图号 Dwg.No.	

未盖技术出图章 本图纸无效
This drawing is valid only after being stamped and released by the R&D

利用 pdfFactory Pro 测试版本创建的PDF文档 www.pdffactory.com

会签		
建筑	电力	
结构	暖通	
给排水	动力	

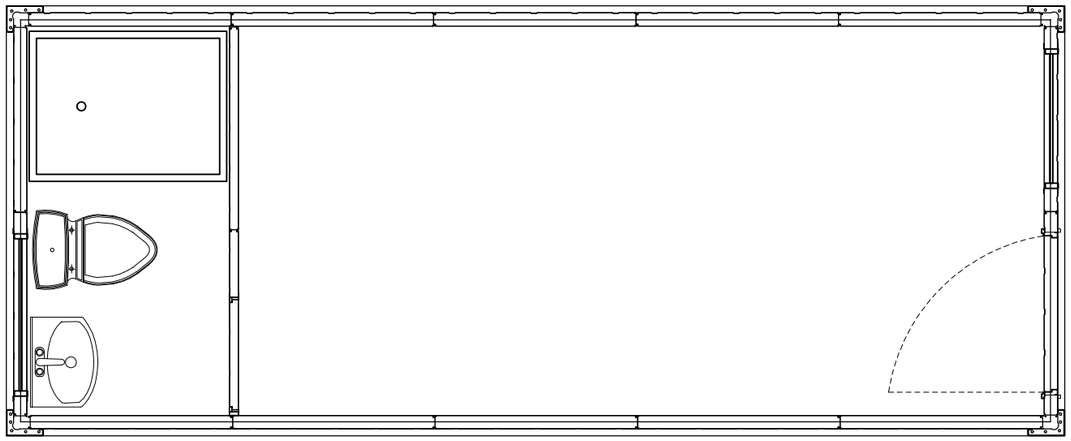

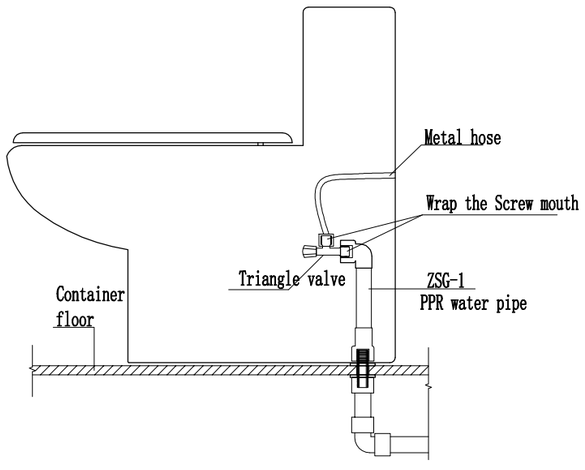

Supply pipes for toilet

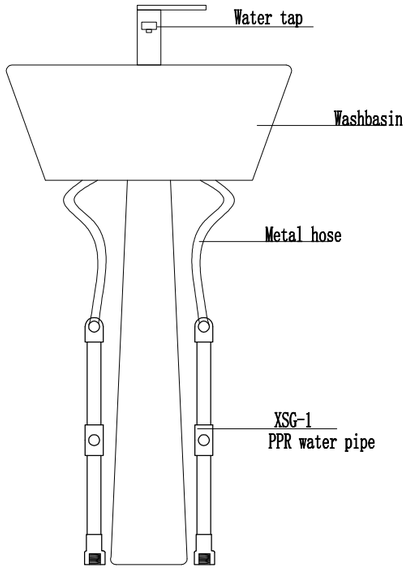

Supply pipe for washbasin

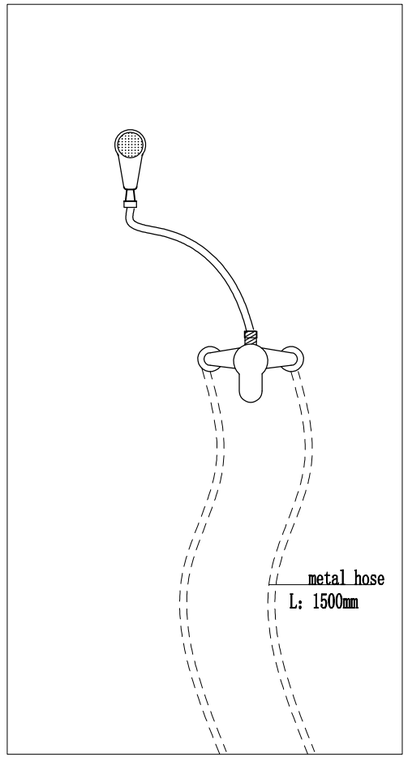

Install the shower room

Copyright 2016.
This drawing remains the property of Hangzhou xixi Buildings Co.,Ltd, it may only be used for the purpose for which it was commissioned & in accordance with the terms of engagement for that commission. Unauthorized use of this drawing is prohibited.

CUSTOMIZED BUILDINGS

Hangzhou Xixi Building Co., LTD
Mr. Cancan Kang
Cell Phone & WhatsApp & Viber: 008613757163354
QQ & WeChat: 66048573 Email: cancancbc@qq.com
Add.: 20th Floor, Xinyi Guangchang, Xiaoshan, Hangzhou,

版本 Rev.	修改内容 Description	日期 Date	发布人 who send

证书等级	
证书编号	

合作设计单位
Cooperative Designer

工序 Process	签名 Signature	日期 Date
审定 Authorized By		
审核 Verified By		
项目负责人 Process		
校对人 Checked By		
设计 Designed By		
制图 Drawn By		

执业签章
Engineer Signature

出图签章
Engineer Signature

项目名称
Project Name

图名
Title
卫浴安装

工程编号 Title	#878	专业 Title	JZ
比例 Scale		图号 Dwg.No.	

未盖技术出图章 本图纸无效
This drawing is valid only after being stamped and released by the R&D

利用 pdfFactory Pro 测试版本创建的PDF文档 www.pdffactory.com

会签	
建筑	电力
结构	暖通
给排水	动力

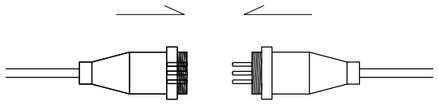

Quick connect socket wire connection

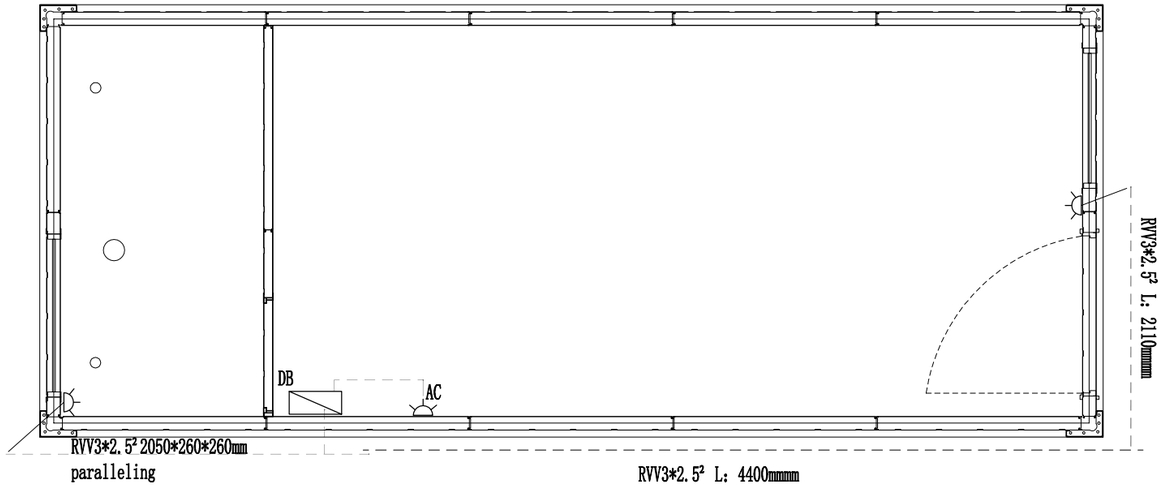

Socket layout

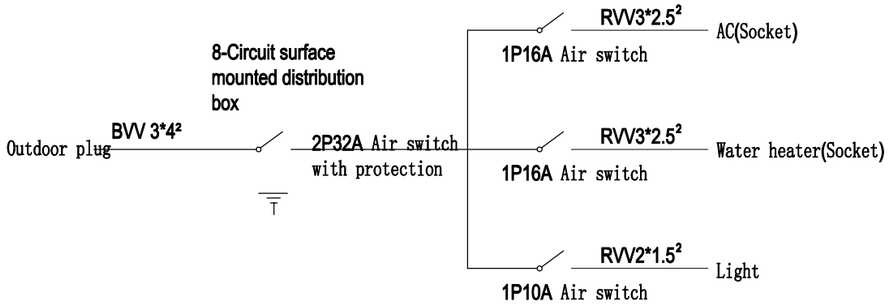

Power system layout for single unit

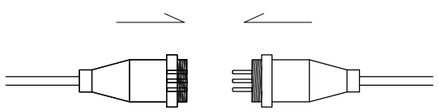

Quick connect socket wire connection

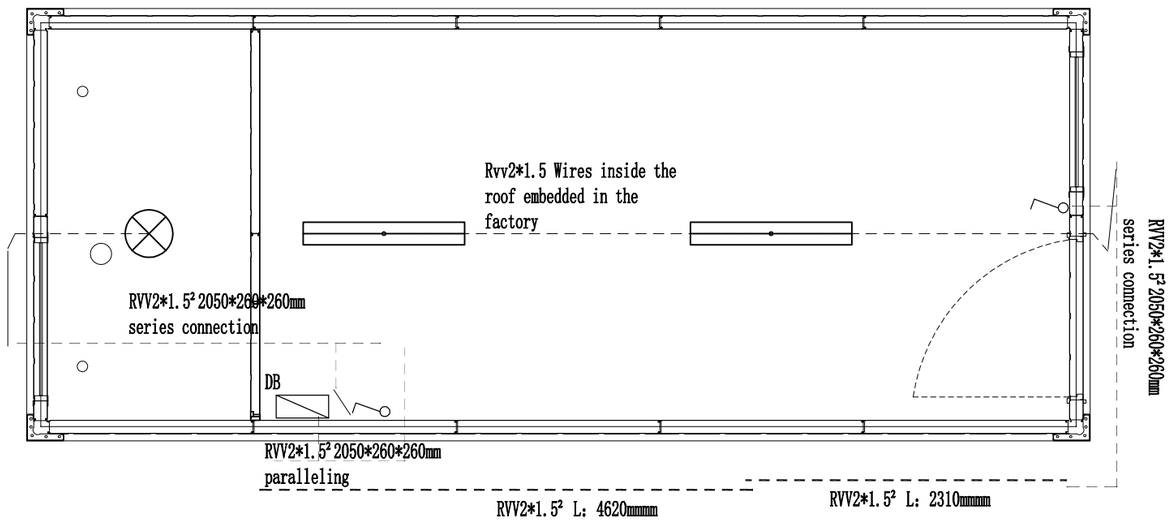

Switch layout

Copyright 2016.
This drawing remains the property of Hangzhou xixi Buildings Co.,Ltd, It may only be used for the purpose for which it was commissioned & in accordance with the terms of engagement for that commission. Unauthorized use of this drawing is prohibited.

CUSTOMIZED BUILDINGS

Hangzhou Xixi Building Co., LTD
Mr. Cancan Kang
Cell Phone & WhatsApp & Viber: 008613757163354
QQ & WeChat: 66048573 Email: cancancbc@qq.com
Add.: 20th Floor, Xinyi Guangchang, Xiaoshan, Hangzhou,

版本 Rev.	修改内容 Description	日期 Date	复核人 who send

证书等级	
证书编号	

合作设计单位 Cooperative Designer

工序 Process	签名 Signature	日期 Date
审定 Authorized By		
审核 Verified By		
项目负责人 Process		
校对人 Checked By		
设计 Designed By		
制图 Drawn By		

执业签章 Engineer Signature

出图签章 Engineer Signature

项目名称 Project Name

图名 Title: 单箱电力布置

工程编号 Title	#878	专业 Title	JZ
比例 Scale		图号 Dwg.No.	

未盖技术出图章 本图纸无效
This drawing is valid only after being stamped and released by the R&D

利用 pdfFactory Pro 测试版本创建的PDF文档 www.pdffactory.com

会签	
建筑	电力
结构	暖通
给排水	动力

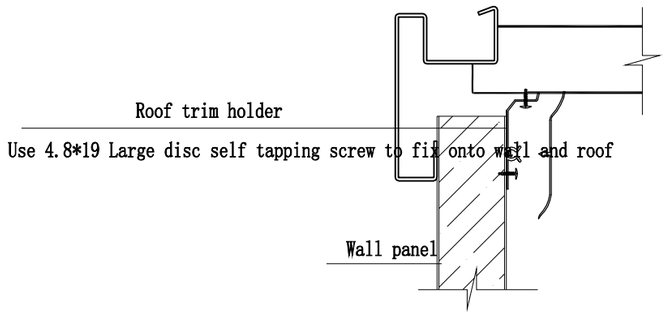

Roof trim

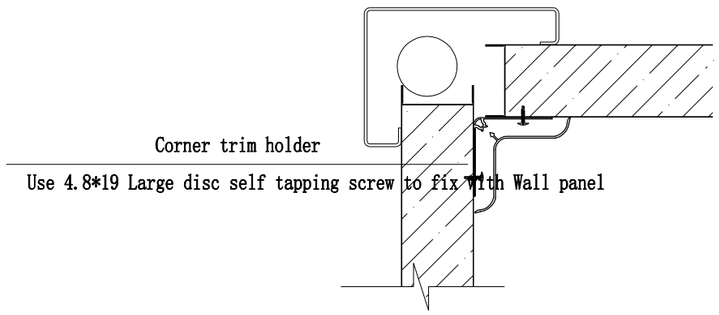

Corner trim install

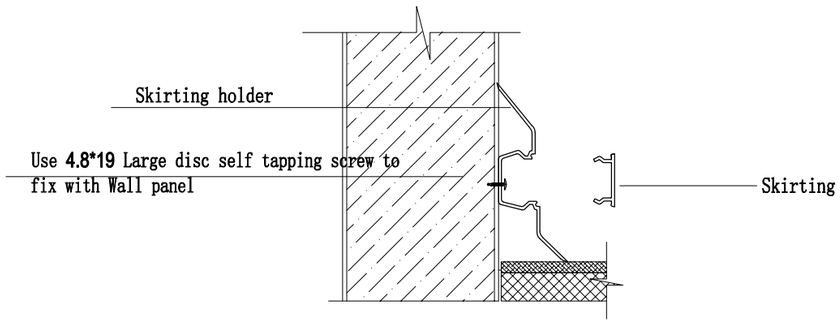

Skirting install

Copyright 2016.
This drawing remains the property of Hangzhou xixi Buildings Co.,Ltd, it may only be used for the purpose for which it was commissioned & in accordance with the terms of engagement for that commission. Unauthorized use of this drawing is prohibited.

CUSTOMIZED BUILDINGS

Hangzhou Xixi Building Co., LTD
Mr. Cancan Kang
Cell Phone & WhatsApp & Viber: 008613757163354
QQ & WeChat: 66048573 Email: cancancbc@qq.com
Add.: 20th Floor, Xinyi Guangchang, Xiaoshan, Hangzhou,

版本 Rev.	修改内容 Description	日期 Date	发布人 who send

证书等级	
证书编号	

合作设计单位
Cooperative Designer

工序 Process	签名 Signature	日期 Date
审定 Authorized By		
审核 Verified By		
项目负责人 Process		
校对人 Checked By		
设计 Designed By		
制图 Drawn By		

执业签章
Engineer Signature

出图签章
Engineer Signature

项目名称
Project Name

图名 Title
内饰条安装

工程编号 Title	#878	专业 Title	JZ
比例 Scale		图号 Dwg.No.	

未盖技术出图章 本图纸无效
This drawing is valid only after being stamped and released by the R&D

利用 pdfFactory Pro 测试版本创建的PDF文档 www.pdffactory.com

会签	
建筑	电力
结构	暖通
给排水	动力

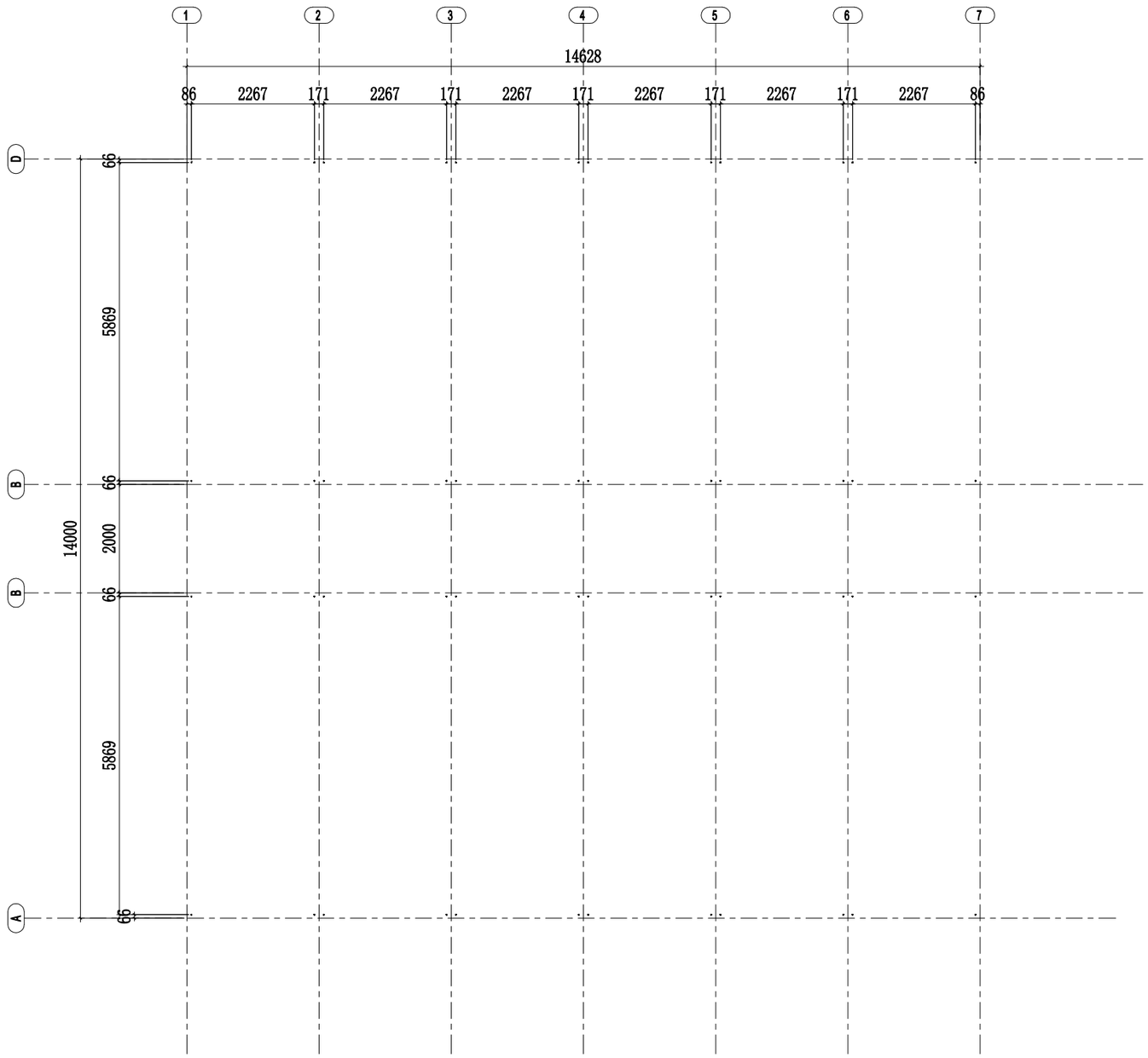

Anchor bolts layout

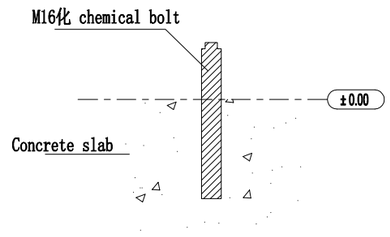

Copyright 2016.
This drawing remains the property of Hangzhou xixi Buildings Co.,Ltd, It may only be used for the purpose for which it was commissioned & In accordance with the terms of engagement for that commission. Unauthorized use of this drawing is prohibited.

CUSTOMIZED BUILDINGS
Hangzhou Xixi Building Co., LTD
Mr. Cancan Kang
Cell Phone & WhatsApp & Viber: 008613757163354
QQ & WeChat: 66048573 Email: cancancbc@qq.com
Add.: 20th Floor, Xinyi Guangchang, Xiaoshan, Hangzhou,

版本 Rev.	修改内容 Description	日期 Date	发布人 who send

证书等级	
证书编号	

合作设计单位
Cooperative Designer

工序 Process	签名 Signature	日期 Date
审定 Authorized By		
审核 Verified By		
项目负责人 Process		
校对人 Checked By		
设计 Designed By		
制图 Drawn By		

执业签章
Engineer Signature

出图签章
Engineer Signature

项目名称
Project Name

图名 Title
箱底锚栓布置图

工程编号 Title	#878	专业 Title	JZ
比例 Scale		图号 Dwg.No.	

未盖技术出图章 本图纸无效
This drawing is valid only after being stamped and released by the R&D

利用 pdfFactory Pro 测试版本创建的PDF文档 www.pdffactory.com

Remark:

1. hoist the assembled flatpack units to the foundation directly
2. Make sure four corners of the flatpack are in the same level after put it onto the foundation
3. Put the walkway panels between the flatpack containers

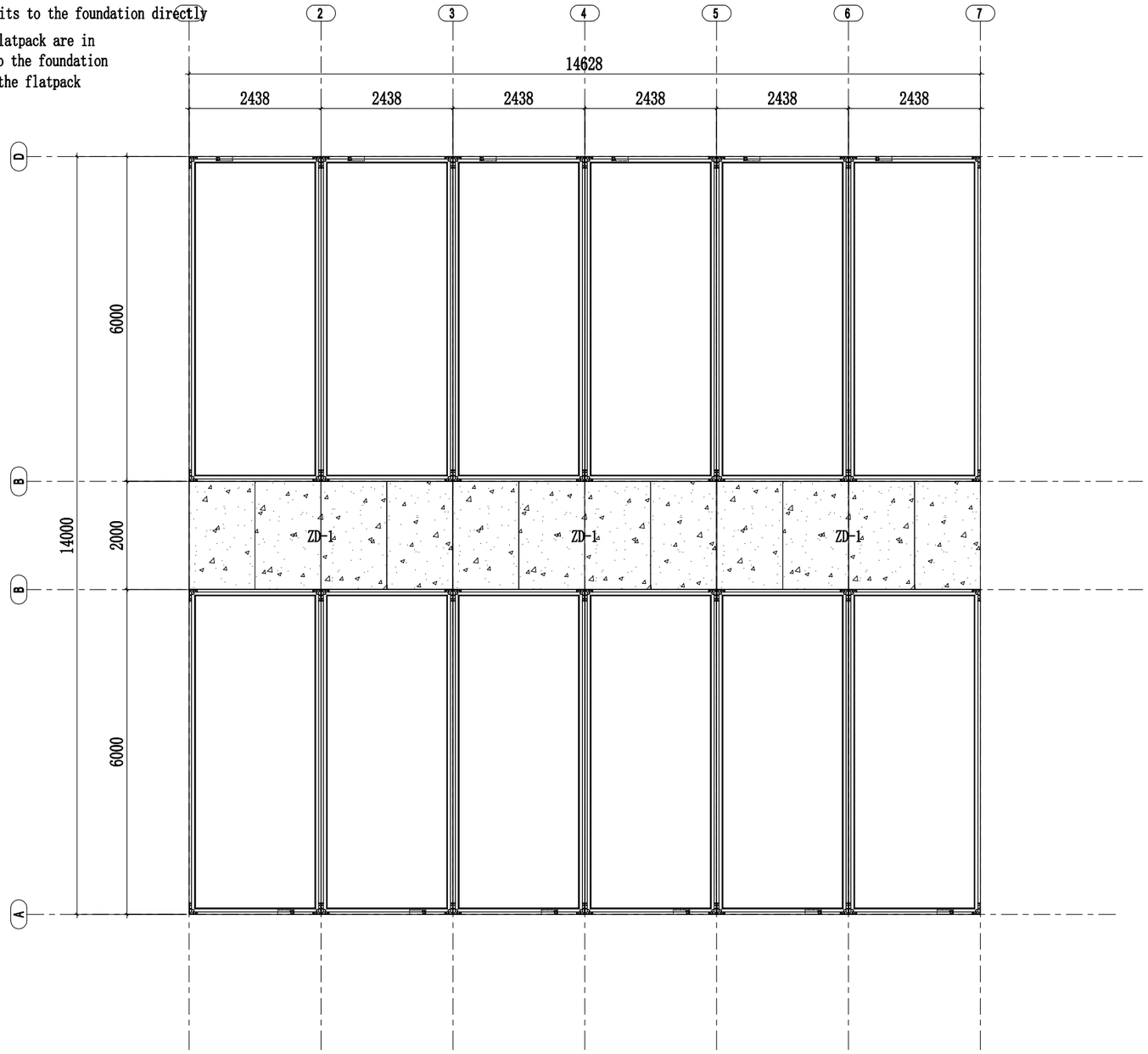

G.Floor flatpack install

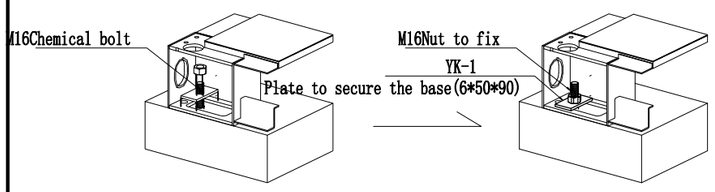

Flatpack base connect with the foundation 3d

会签		
建筑	结构	给排水
电力	暖通	动力

Copyright 2016.
This drawing remains the property of Hangzhou xixi Buildings Co.,Ltd, it may only be used for the purpose for which it was commissioned & in accordance with the terms of engagement for that commission. Unauthorized use of this drawing is prohibited.

CUSTOMIZED BUILDINGS
Hangzhou Xixi Building Co., LTD
Mr. Cancan Kang
Cell Phone & WhatsApp & Viber: 008613757163354
QQ & WeChat: 66048573 Email: cancancbc@qq.com
Add.: 20th Floor, Xinyi Guangchang, Xiaoshan, Hangzhou,

版本 Rev.	修改内容 Description	日期 Date	发布人 who send

证书等级	
证书编号	

合作设计单位
Cooperative Designer

工序 Process	签名 Signature	日期 Date
审定 Authorized By		
审核 Verified By		
项目负责人 Process		
校对人 Checked By		
设计 Designed By		
制图 Drawn By		

执业签章
Engineer Signature

出图签章
Engineer Signature

项目名称
Project Name

图名 Title: 箱底与基础连接

工程编号 Title	#878	专业 Title	JZ
比例 Scale		图号 Dwg.No.	

未盖技术出图章 本图纸无效
This drawing is valid only after being stamped and released by the R&D

利用 pdfFactory Pro 测试版本创建的PDF文档 www.pdffactory.com

会签	
建筑	
结构	
给排水	
电力	
暖通	
动力	

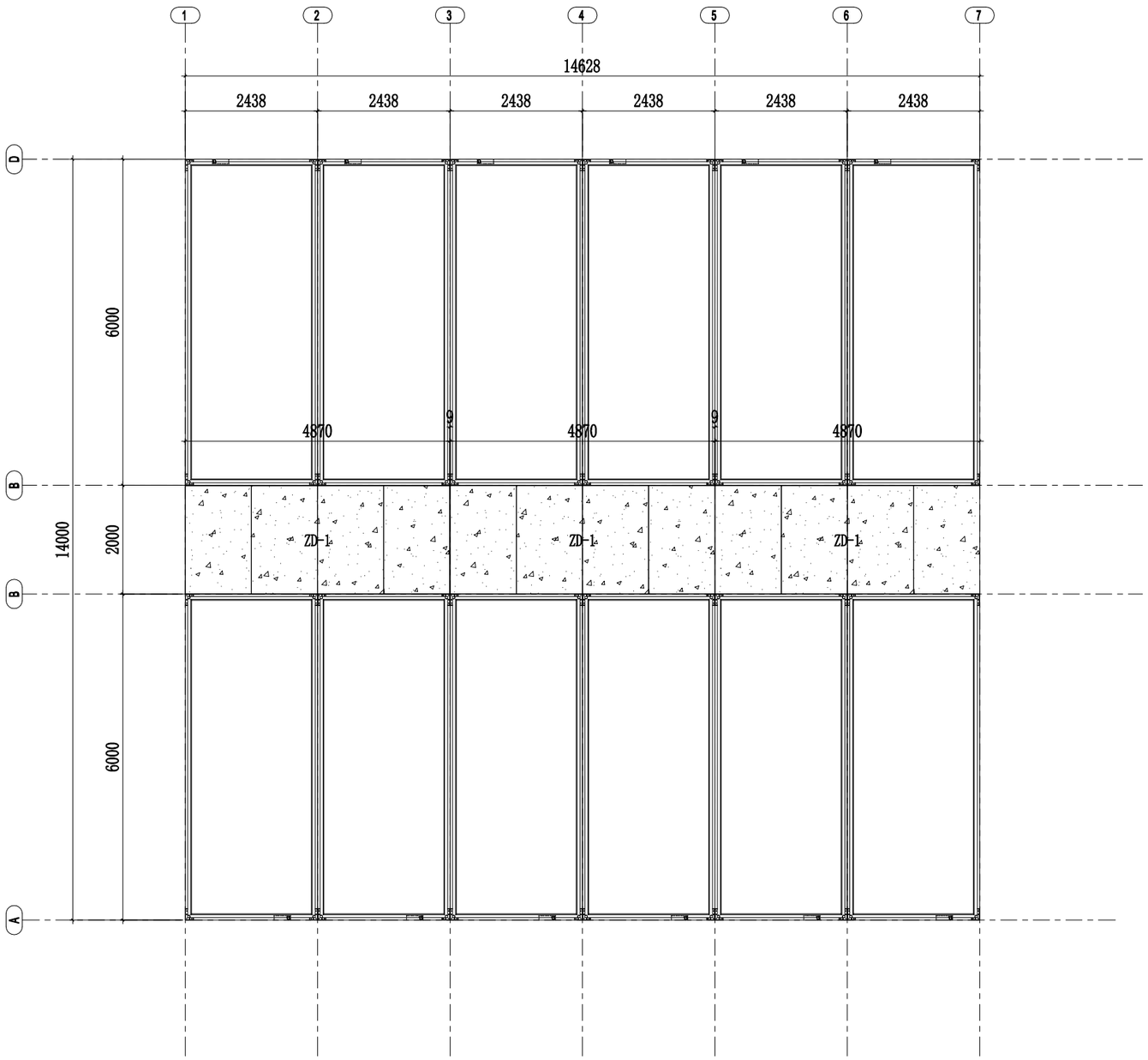

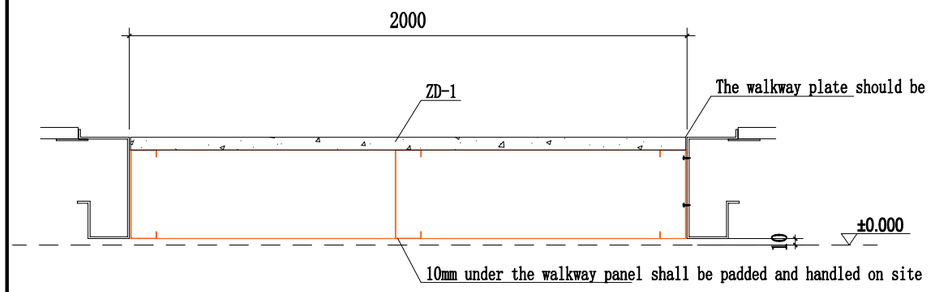

Walkway installation

Install the walkway of the G.floor

The walkway plate should be in the same level with the container bottom beam

Note: 1. Before put glue, clean the surface of cement fiberboard and apply glue evenly, with an area of about 2.8 square meters per kilogram of glue

2. After sticking pvc floor, roll evenly with roller.

3. Pvc floor can be installed finally

Copyright 2016.

This drawing remains the property of Hangzhou xixi Buildings Co.,Ltd, it may only be used for the purpose for which it was commissioned & in accordance with the terms of engagement for that commission. Unauthorized use of this drawing is prohibited.

CUSTOMIZED BUILDINGS

Hangzhou Xixi Building Co., LTD

Mr. Cancan Kang
Cell Phone & WhatsApp & Viber: 008613757163354
QQ & WeChat: 66048573 Email: cancancbc@qq.com
Add.: 20th Floor, Xinyi Guangchang, Xiaoshan, Hangzhou,

版本 Rev.	修改内容 Description	日期 Date	发布人 who send

证书等级	
证书编号	

合作设计单位
Cooperative Designer

工序 Process	签名 Signature	日期 Date
审定 Authorized By		
审核 Verified By		
项目负责人 Process		
校对人 Checked By		
设计 Designed By		
制图 Drawn By		

执业签章
Engineer Signature

出图签章
Engineer Signature

项目名称
Project Name

图名 Title: 一层走道安装

工程编号 Title	#878	专业 Title	JZ
比例 Scale		图号 Dwg.No.	

未盖技术出图章 本图纸无效
This drawing is valid only after being stamped and released by the R&D

利用 pdfFactory Pro 测试版本创建的PDF文档 www.pdffactory.com

Connection plate for G. Floor

1. Install the connection plate before intall the F.Floor
2. Install the connection plate as per instructions
3. Use M12*30 Countersunk head hexagon socket bolt to fix

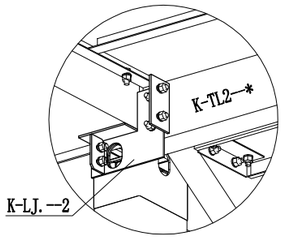

Note: install the walkway wall panel first, and then the stairs

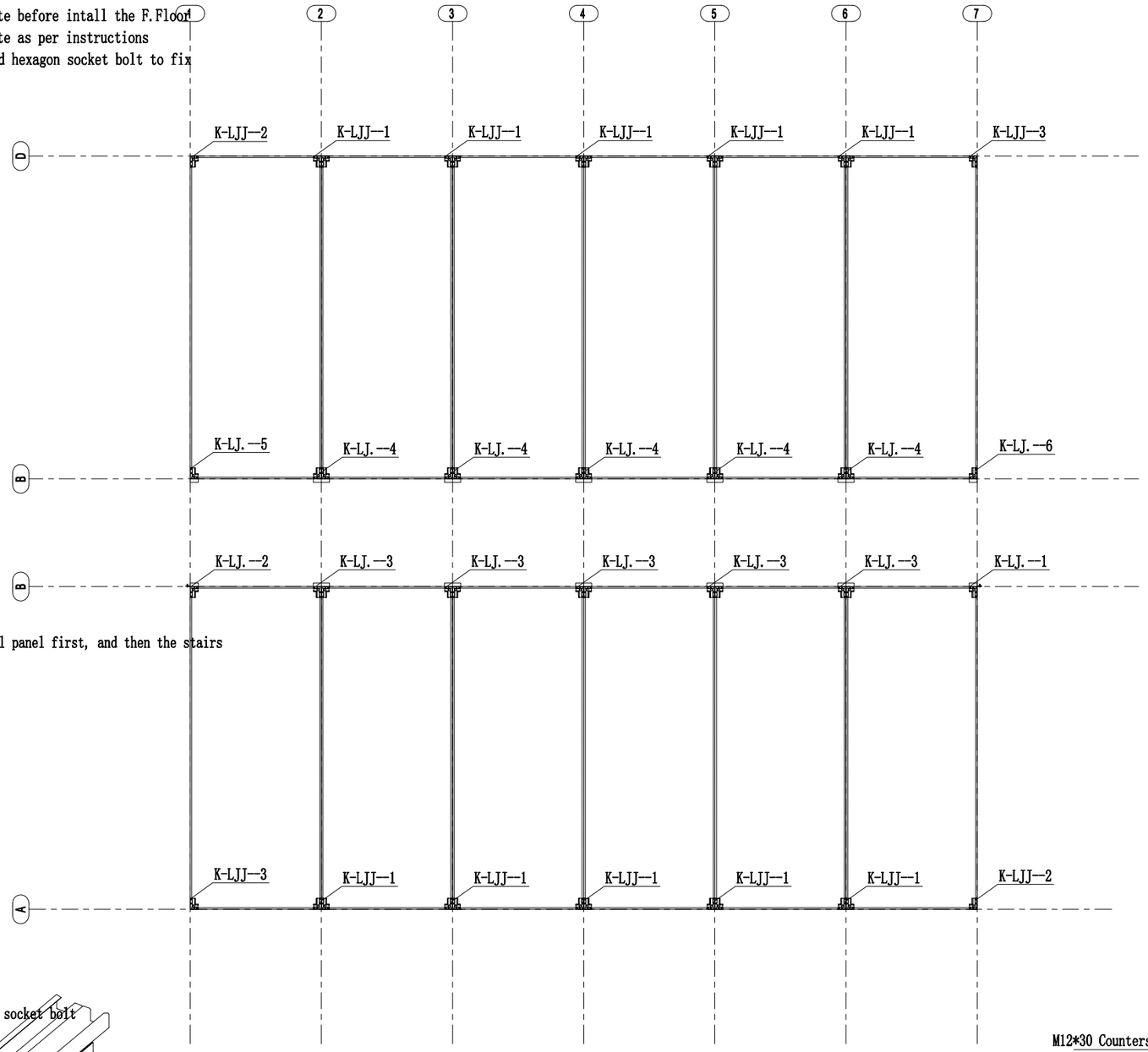

Connection plates layout for G. floor

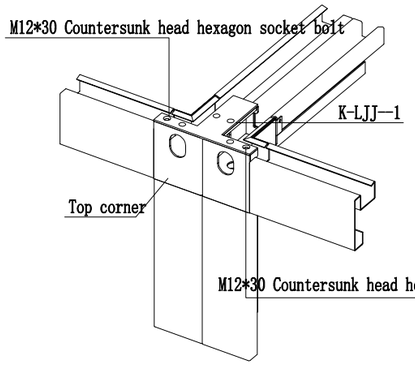

Connection plate install

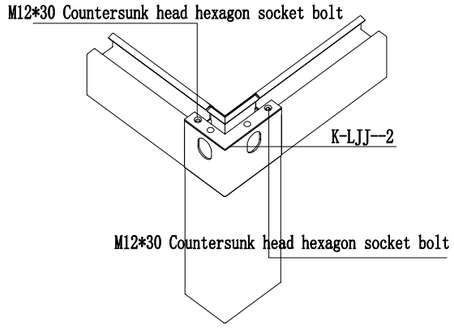

Connection plate install

会签	
建筑	电力
结构	暖通
给排水	动力

Copyright 2016.
This drawing remains the property of Hangzhou xixi Buildings Co.,Ltd, It may only be used for the purpose for which it was commissioned & In accordance with the terms of engagement for that commission. Unauthorized use of this drawing is prohibited.

CUSTOMIZED BUILDINGS

Hangzhou Xixi Building Co., LTD
Mr. Cancan Kang
Cell Phone & WhatsApp & Viber: 008613757163354
QQ & WeChat: 66048573 Email: cancancbc@qq.com
Add.: 20th Floor, Xinyi Guangchang, Xiaoshan, Hangzhou,

版本 Rev.	修改内容 Description	日期 Date	发布人 who send

证书等级

证书编号

合作设计单位 Cooperative Designer

工序 Process	签名 Signature	日期 Date
审定 Authorized By		
审核 Verified By		
项目负责人 Process		
校对人 Checked By		
设计 Designed By		
制图 Drawn By		

执业签章 Engineer Signature

出图签章 Engineer Signature

项目名称 Project Name

图名 Title 一层箱体连接板安装

工程编号 Title	#878	专业 Title	JZ
比例 Scale		图号 Dwg.No.	

未盖技术出图章 本图纸无效
This drawing is valid only after being stamped and released by the R&D

利用 pdfFactory Pro 测试版本创建的PDF文档 www.pdffactory.com

会签	
建筑	
结构	
给排水	
电力	
暖通	
动力	

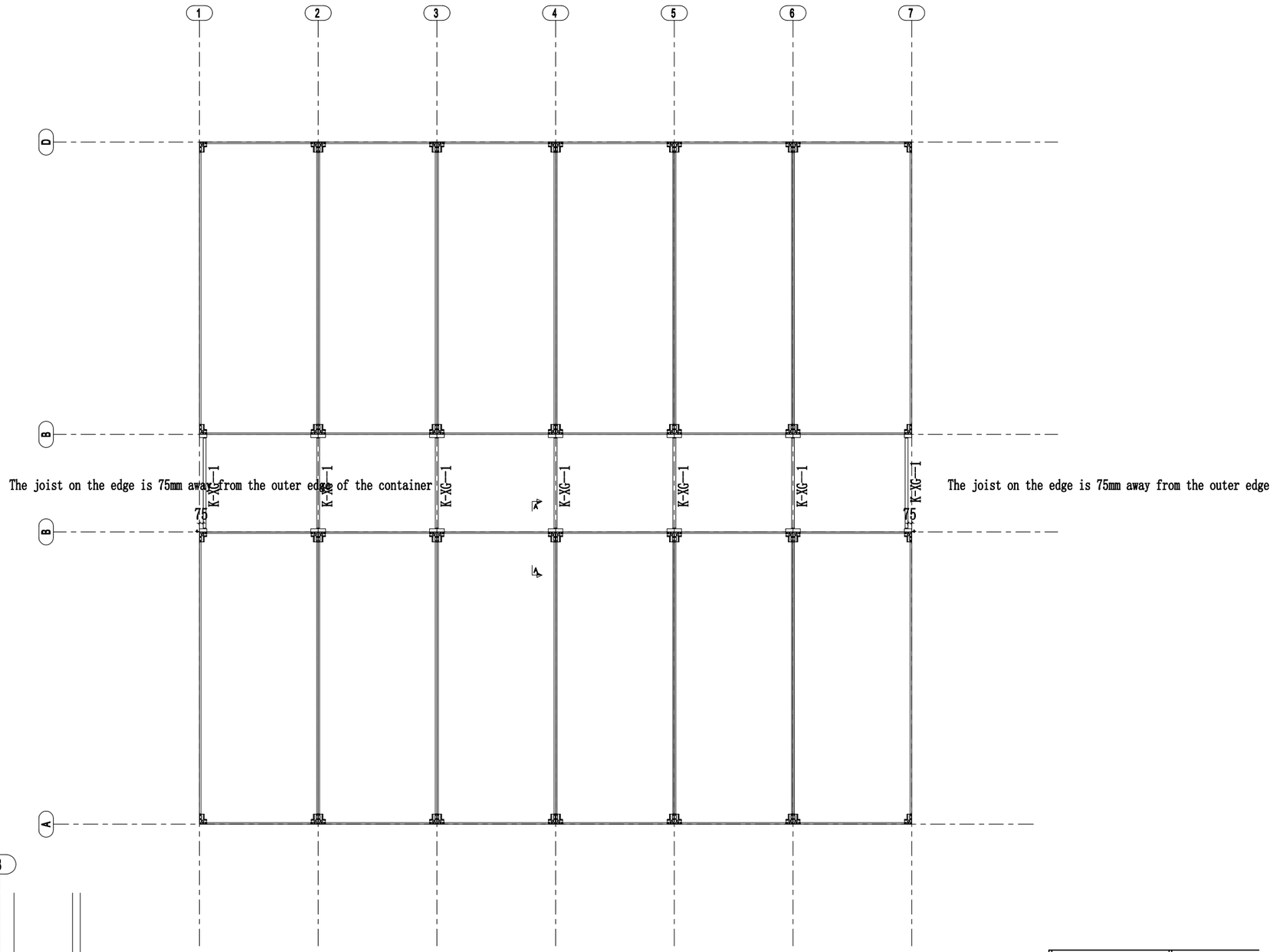

Beam for F.Floor walkway

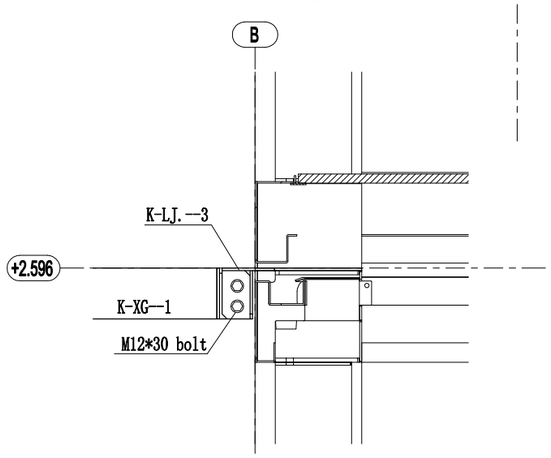

Beam for walkway
A-A

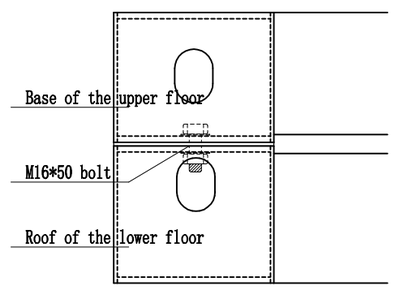

Connect the containers between up and down

Copyright 2016.
This drawing remains the property of Hangzhou xixi Buildings Co.,Ltd, It may only be used for the purpose for which it was commissioned & In accordance with the terms of engagement for that commission. Unauthorized use of this drawing is prohibited.

CUSTOMIZED BUILDINGS

Hangzhou Xixi Building Co., LTD
Mr. Cancan Kang
Cell Phone & WhatsApp & Viber: 00861375163354
QQ & WeChat: 66048573 Email: cancancbc@qq.com
Add.: 20th Floor, Xinyi Guangchang, Xiaoshan, Hangzhou,

版本 Rev.	修改内容 Description	日期 Date	发布人 who send

证书等级	
证书编号	

合作设计单位
Cooperative Designer

工序 Process	签名 Signature	日期 Date
审定 Authorized By		
审核 Verified By		
项目负责人 Process		
校对人 Checked By		
设计 Designed By		
制图 Drawn By		

执业签章
Engineer Signature

出图签章
Engineer Signature

项目名称
Project Name

图名 Title: 二层走道托梁安装

工程编号 Title	#878	专业 Title	JZ
比例 Scale		图号 Dwg.No.	

未盖技术出图章 本图纸无效
This drawing is valid only after being stamped and released by the R&D

利用 pdfFactory Pro 测试版本创建的PDF文档 www.pdffactory.com

会签		
建筑	结构	给排水
电力	暖通	动力

Install walkway in F.Floor:

1. Put the walkway between the containers according to the position showed and keep them the same level with the container beam

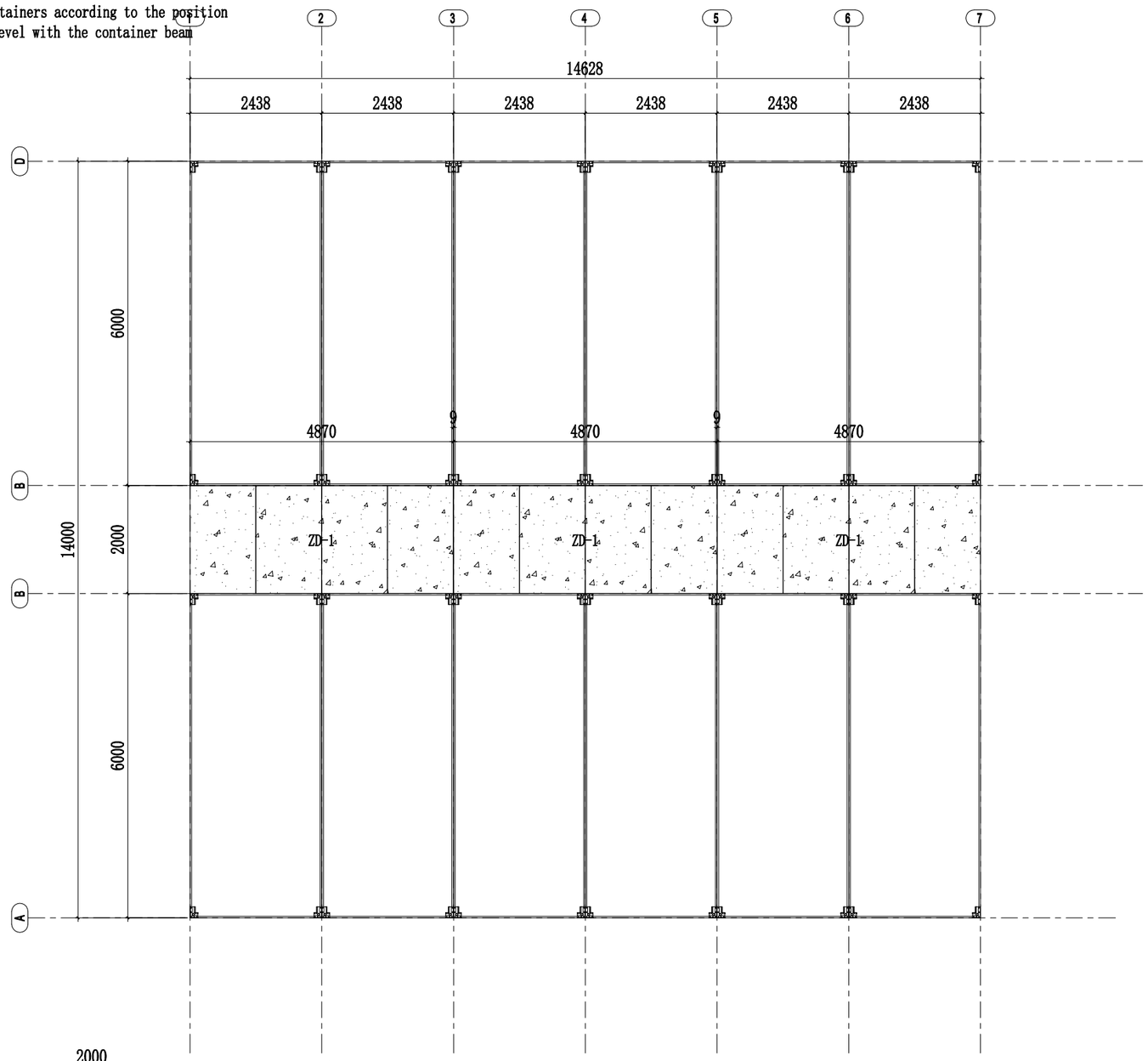

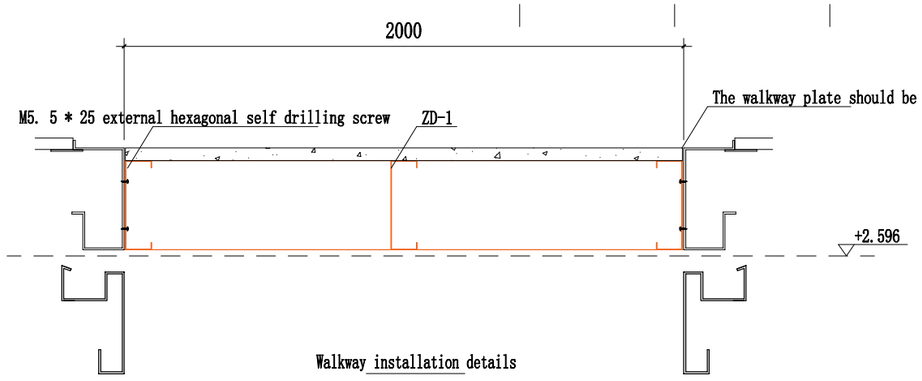

Walkway installation details

Install walkway in the F. Floor

The walkway plate should be in the same level with the container bottom beam

Note: 1. Before put glue, clean the surface of cement fiberboard and apply glue evenly, with an area of about 2.8 square meters per kilogram of glue

2. After sticking pvc floor, roll evenly with roller.

3. Pvc floor can be installed finally

Copyright 2016.

This drawing remains the property of Hangzhou xixi Buildings Co.,Ltd, It may only be used for the purpose for which it was commissioned & in accordance with the terms of engagement for that commission. Unauthorized use of this drawing is prohibited.

CUSTOMIZED BUILDINGS

Hangzhou Xixi Building Co., LTD

Mr. Cancan Kang

Cell Phone & WhatsApp & Viber: 00861375716335 4

QQ & WeChat: 66048573 Email: cancancbc@qq.com

Add.: 20th Floor, Xinyi Guangchang, Xiaoshan, Hangzhou,

版本 Rev.	修改内容 Description	日期 Date	发布人 who send

证书等级	
证书编号	

合作设计单位 Cooperative Designer

工序 Process	签名 Signature	日期 Date
审定 Authorized By		
审核 Verified By		
项目负责人 Process		
校对人 Checked By		
设计 Designed By		
制图 Drawn By		

执业签章 Engineer Signature

出图签章 Engineer Signature

项目名称 Project Name

图名 Title: 二层走道安装

工程编号 Title	#878	专业 Title	JZ
比例 Scale		图号 Dwg.No.	

未盖技术出图章 本图纸无效

This drawing is valid only after being stamped and released by the R&D

利用 pdfFactory Pro 测试版本创建的PDF文档 www.pdffactory.com

会签		
建筑	电力	
结构	暖通	
给排水	动力	

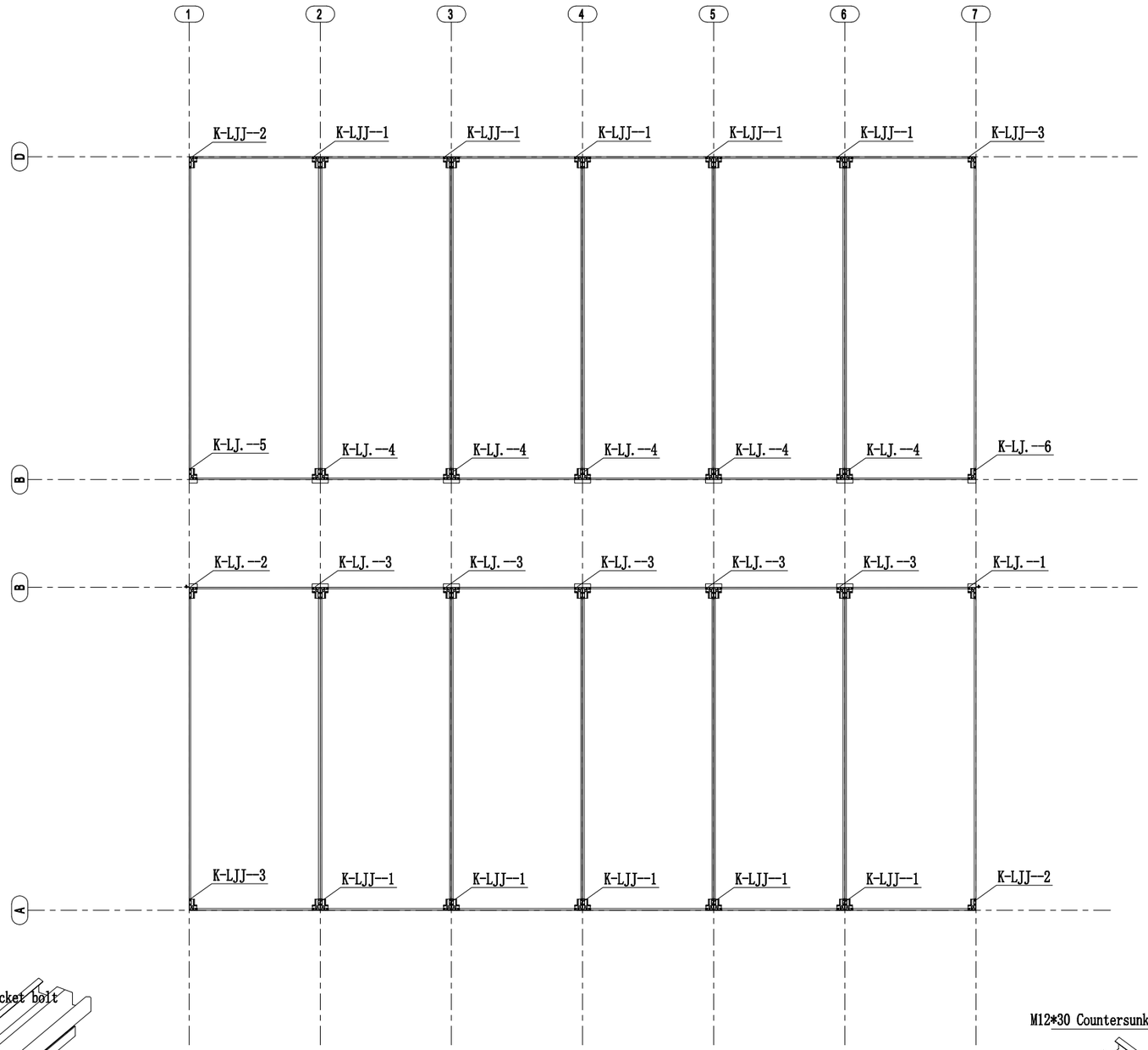

Connection plate layout of F.floor

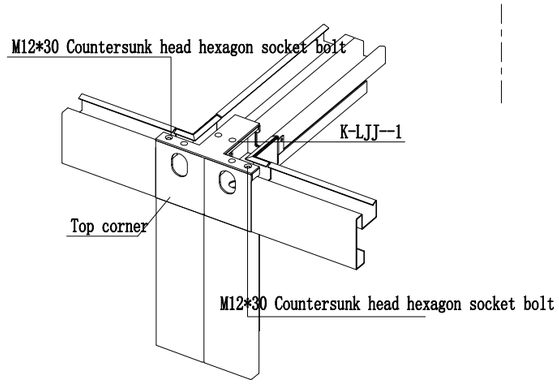

Connection plate install

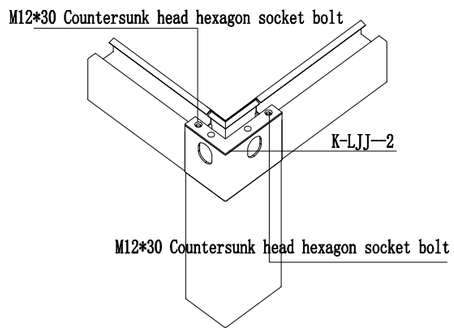

Connection plate install

Copyright 2016.
This drawing remains the property of Hangzhou xixi Buildings Co.,Ltd, it may only be used for the purpose for which it was commissioned & in accordance with the terms of engagement for that commission. Unauthorized use of this drawing is prohibited.

CUSTOMIZED BUILDINGS

Hangzhou Xixi Building Co., LTD
Mr. Cancan Kang
Cell Phone & WhatsApp & Viber: 008613757163354
QQ & WeChat: 66048573 Email: cancancbc@qq.com
Add.: 20th Floor, Xinyi Guangchang, Xiaoshan, Hangzhou,

版本 Rev.	修改内容 Description	日期 Date	发布人 who send

证书等级	
证书编号	

合作设计单位
Cooperative Designer

工序 Process	签名 Signature	日期 Date
审定 Authorized By		
审核 Verified By		
项目负责人 Process		
校对人 Checked By		
设计 Designed By		
制图 Drawn By		

执业签章
Engineer Signature

出图签章
Engineer Signature

项目名称
Project Name

图名 Title
二层箱体连接板安装

工程编号 Title	#878	专业 Title	JZ
比例 Scale		图号 Dwg.No.	

未盖技术出图章 本图纸无效
This drawing is valid only after being stamped and released by the R&D

利用 pdfFactory Pro 测试版本创建的PDF文档 www.pdffactory.com

会签	
建筑	
结构	
给排水	
电力	
暖通	
动力	

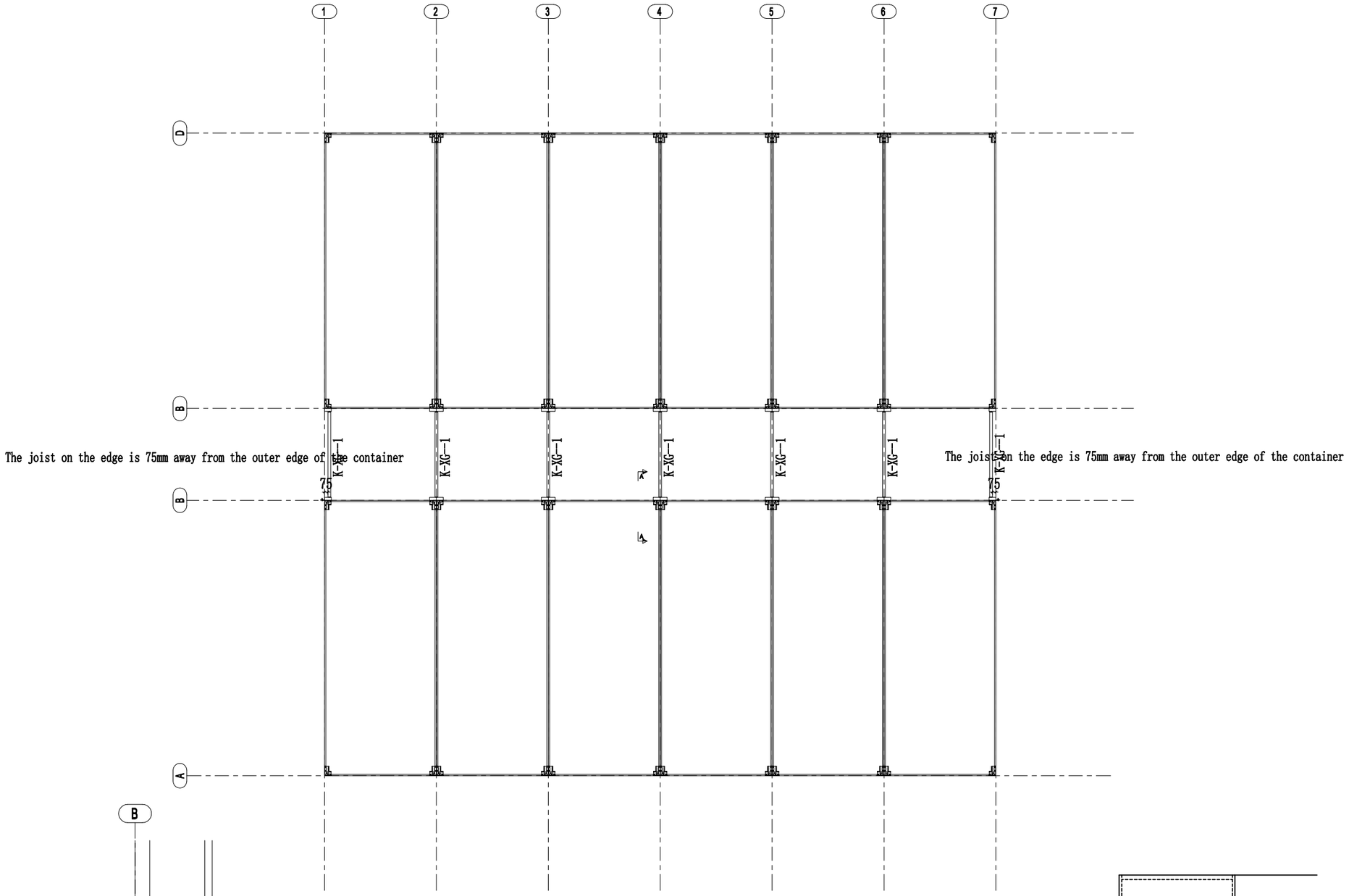

Beam for S.Floor

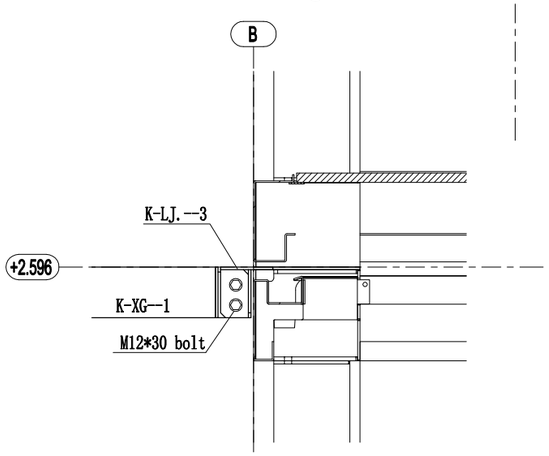

Beam for walkway
A-A

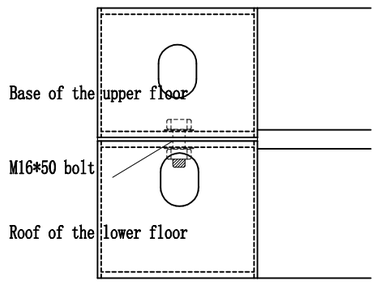

Connect the containers between up and down

Copyright 2016.
This drawing remains the property of Hangzhou xixi Buildings Co.,Ltd, it may only be used for the purpose for which it was commissioned & in accordance with the terms of engagement for that commission. Unauthorized use of this drawing is prohibited.

CUSTOMIZED BUILDINGS

Hangzhou Xixi Building Co., LTD
Mr. Cancan Kang
Cell Phone & WhatsApp & Viber: 008613757163354
QQ & WeChat: 66048573 Email: cancancbc@qq.com
Add.: 20th Floor, Xinyi Guangchang, Xiaoshan, Hangzhou,

版本 Rev.	修改内容 Description	日期 Date	发布人 who send

证书等级	
证书编号	

合作设计单位
Cooperative Designer

工序 Process	签名 Signature	日期 Date
审定 Authorized By		
审核 Verified By		
项目负责人 Process		
校对人 Checked By		
设计 Designed By		
制图 Drawn By		

执业签章
Engineer Signature

出图签章
Engineer Signature

项目名称
Project Name

图名 Title
三层走道托梁安装

工程编号 Title	#878	专业 Title	JZ
比例 Scale		图号 Dwg.No.	

未盖技术出图章 本图纸无效
This drawing is valid only after being stamped and released by the R&D

利用 pdfFactory Pro 测试版本创建的PDF文档 www.pdffactory.com

会签		
建筑	结构	给排水
电力	暖通	动力

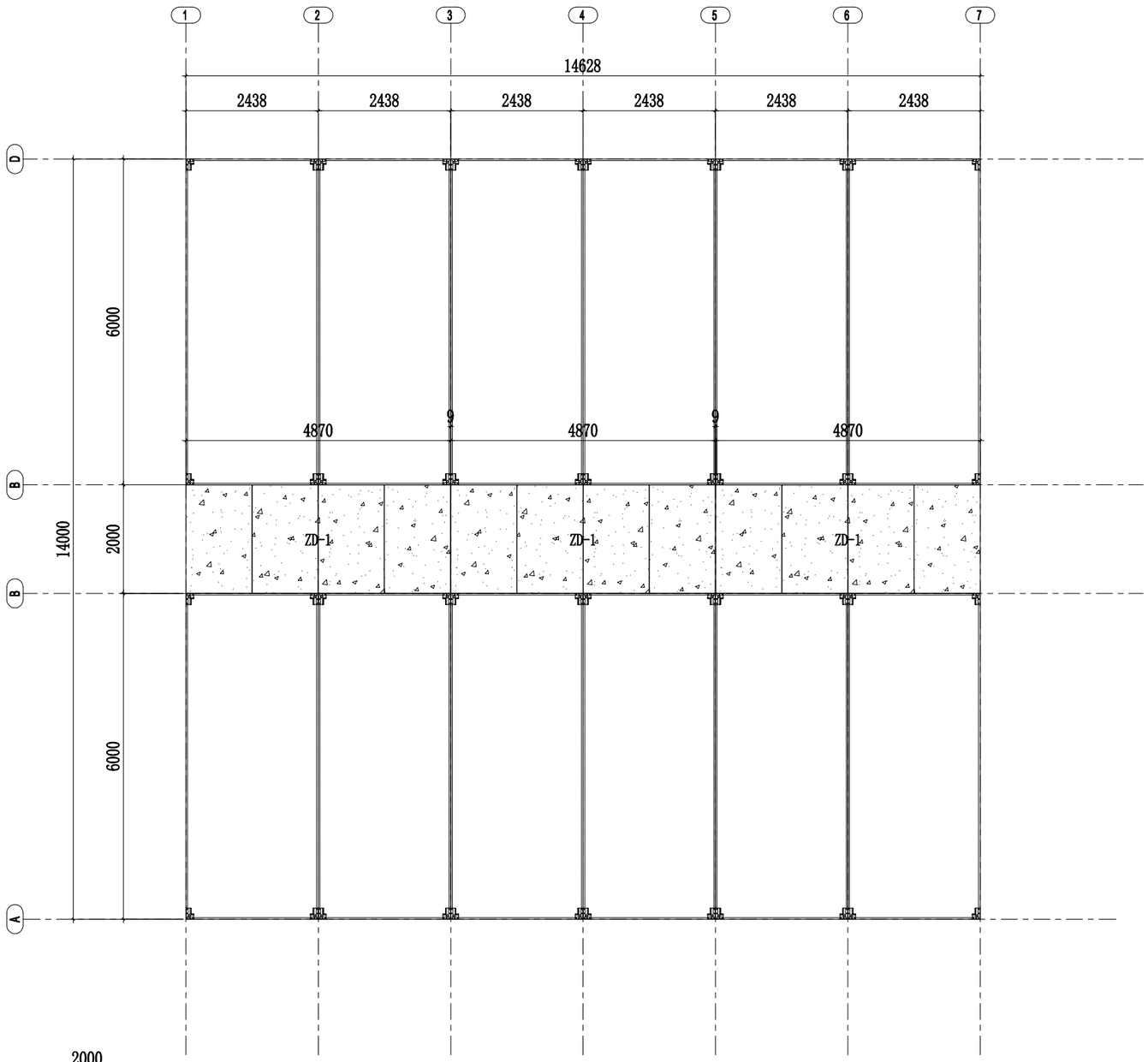

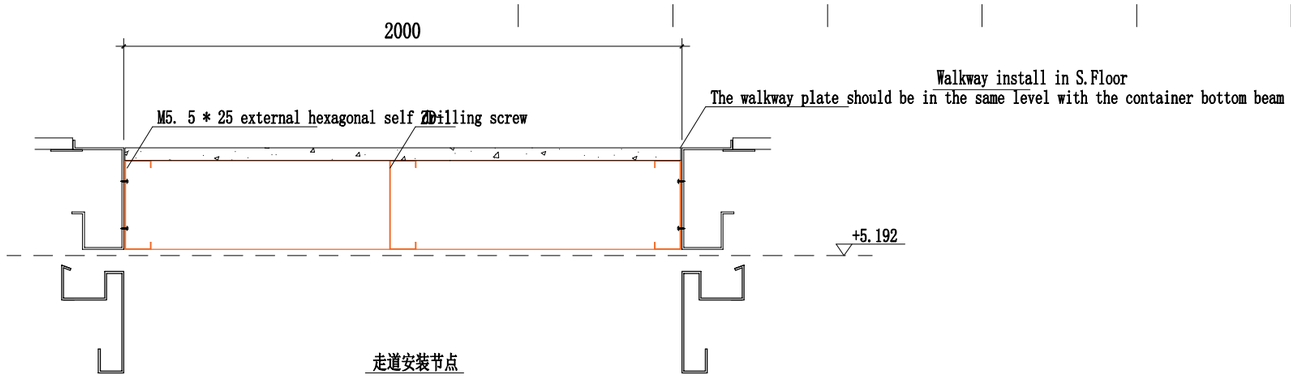

走道安装节点

Note: 1. Before put glue, clean the surface of cement fiberboard and apply glue evenly, with an area of about 2.8 square meters per kilogram of glue

2. After sticking pvc floor, roll evenly with roller.

3. Pvc floor can be installed finally

Copyright 2016.
This drawing remains the property of Hangzhou xixi Buildings Co.,Ltd, It may only be used for the purpose for which it was commissioned & in accordance with the terms of engagement for that commission. Unauthorized use of this drawing is prohibited.

CUSTOMIZED BUILDINGS

Hangzhou Xixi Building Co., LTD
Mr. Cancan Kang
Cell Phone & WhatsApp & Viber: 008613757163354
QQ & WeChat: 66048573 Email: cancancbc@qq.com
Add.: 20th Floor, Xinyi Guangchang, Xiaoshan, Hangzhou,

版本 Rev.	修改内容 Description	日 期 Date	发布人 who send

证书等级	
证书编号	

合作设计单位
Cooperative Designer

工 序 Process	签名 Signature	日 期 Date
审 定 Authorized By		
审 核 Verified By		
项目负责人 Process		
校对人 Checked By		
设 计 Designed By		
制 图 Drawn By		

执业签章
Engineer Signature

出图签章
Engineer Signature

项目名称
Project Name

图 名 Title: 三层走道安装

工程编号 Title	#878	专 业 Title	JZ
比例 Scale		图号 Dwg.No.	

未盖技术出图章 本图纸无效
This drawing is valid only after being stamped and released by the R&D

利用 pdfFactory Pro 测试版本创建的PDF文档 www.pdffactory.com

会签	
建筑	
结构	
给排水	
电力	
暖通	
动力	

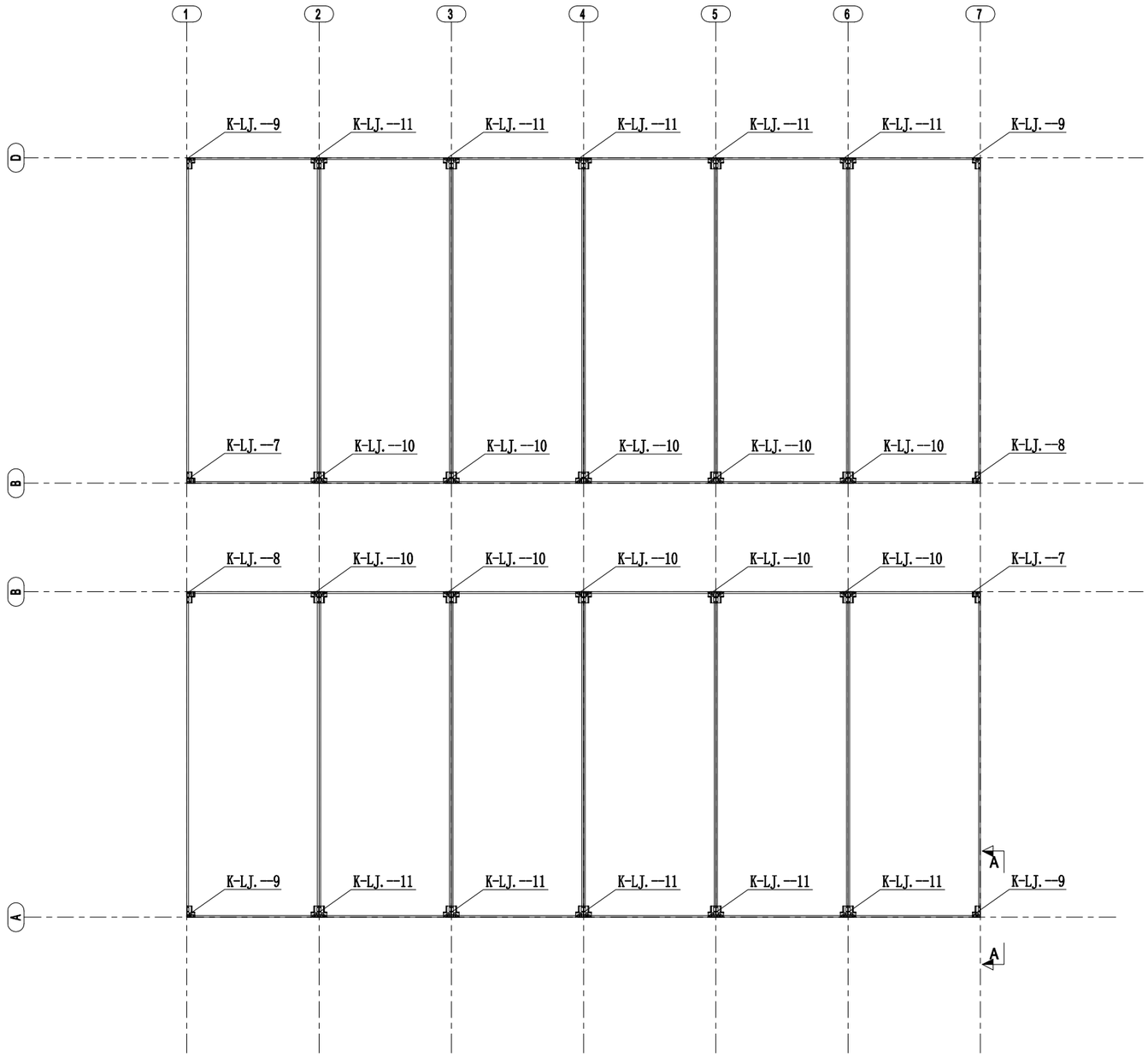

Layout of the connection plate for LGS roof structure

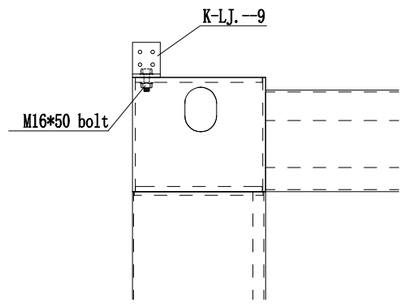

Install the connection plate for roof structure
A-A

Copyright 2016.
This drawing remains the property of Hangzhou xixi Buildings Co.,Ltd, it may only be used for the purpose for which it was commissioned & in accordance with the terms of engagement for that commission. Unauthorized use of this drawing is prohibited.

CUSTOMIZED BUILDINGS

Hangzhou Xixi Building Co., LTD
Mr. Cancan Kang
Cell Phone & WhatsApp & Viber: 008613757163354
QQ & WeChat: 66048573 Email: cancancbc@qq.com
Add.: 20th Floor, Xinyi Guangchang, Xiaoshan, Hangzhou,

版本 Rev.	修改内容 Description	日期 Date	发布人 who send

证书等级	
证书编号	

合作设计单位
Cooperative Designer

工序 Process	签名 Signature	日期 Date
审定 Authorized By		
审核 Verified By		
项目负责人 Process		
校对人 Checked By		
设计 Designed By		
制图 Drawn By		

执业签章
Engineer Signature

出图签章
Engineer Signature

项目名称
Project Name

图名
Title
Roof truss连接件安装

工程编号 Title	#878	专业 Title	JZ
比例 Scale		图号 Dwg.No.	

未盖技术出图章 本图纸无效
This drawing is valid only after being stamped and released by the R&D

利用 pdfFactory Pro 测试版本创建的PDF文档 www.pdffactory.com

会签	
建筑	
结构	
给排水	
电力	
暖通	
动力	

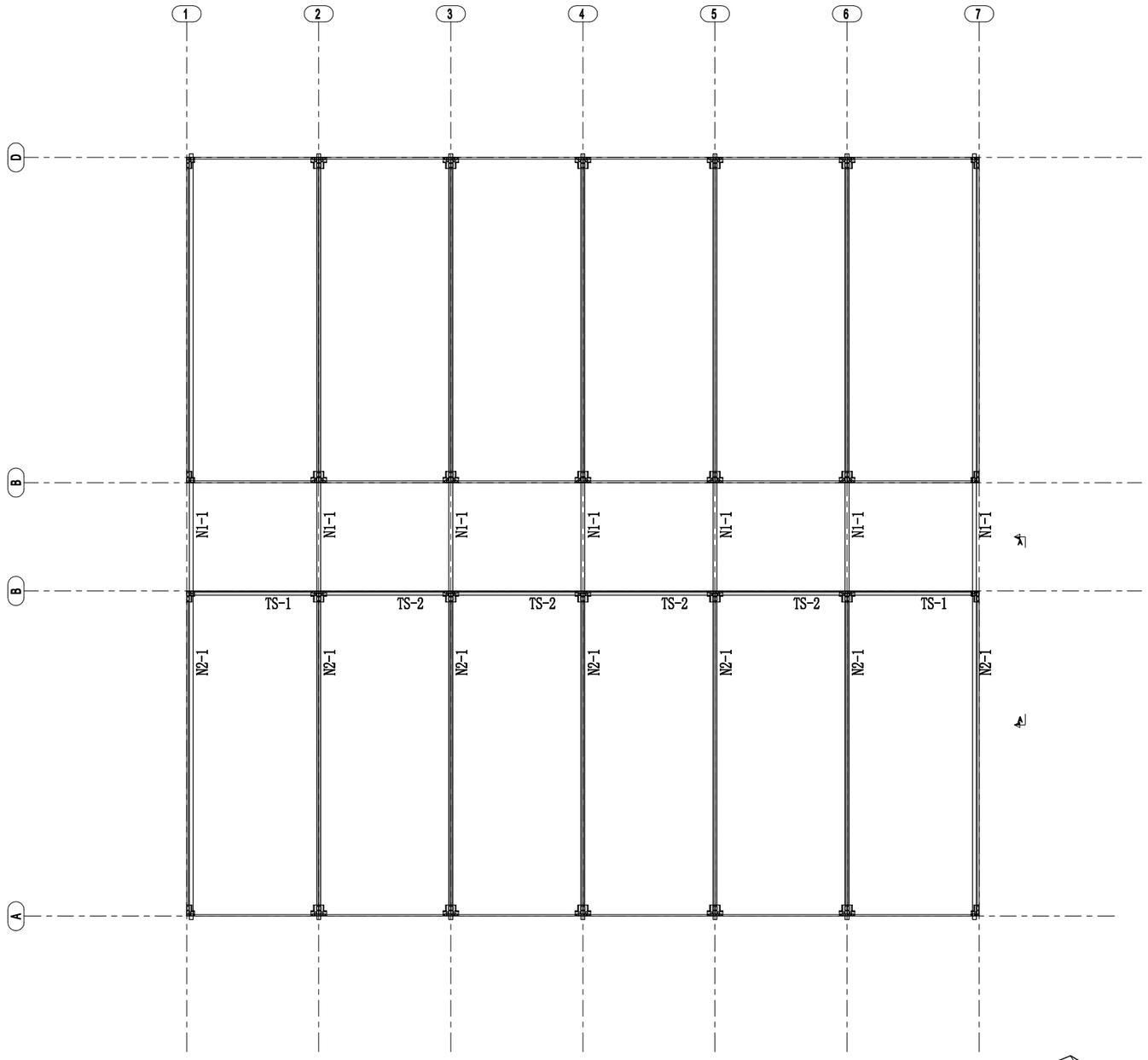

Connection part of the roof structure

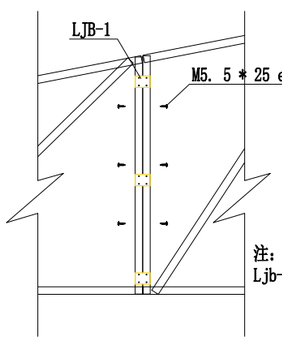

Roof truss reinforcement joint

注：Use M5. 5 * 25 external hexagonal self drilling screw to fix,
Ljb-1 connecting plate is pasted outside the roof truss outside the gable, with M4 8 * 19 large disc self drilling screw fixation

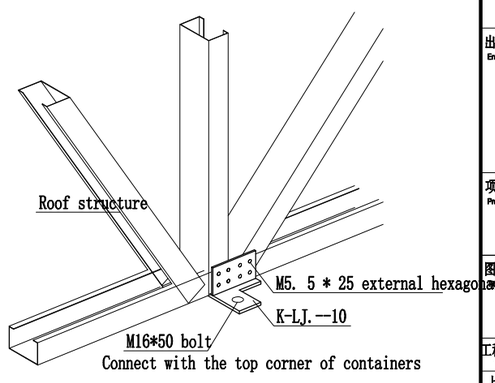

Roof structure installation detail

Copyright 2016.
This drawing remains the property of Hangzhou xixi Buildings Co.,Ltd, It may only be used for the purpose for which it was commissioned & in accordance with the terms of engagement for that commission. Unauthorized use of this drawing is prohibited.

CUSTOMIZED BUILDINGS

Hangzhou Xixi Building Co., LTD
Mr. Cancan Kang
Cell Phone & WhatsApp & Viber: 00861375716335 4
QQ & WeChat: 660485 73 Email: cancancbc@qq.com
Add.: 20th Floor, Xinyi Guangchang, Xiaoshan, Hangzhou,

版本 Rev.	修改内容 Description	日期 Date	发布人 who send

证书等级	
证书编号	

合作设计单位
Cooperative Designer

工序 Process	签名 Signature	日期 Date
审定 Authorized By		
审核 Verified By		
项目负责人 Process		
校对人 Checked By		
设计 Designed By		
制图 Drawn By		

执业签章
Engineer Signature

出图签章
Engineer Signature

项目名称
Project Name

图名
Roof truss安装

工程编号 Title	#878	专业 Title	JZ
比例 Scale		图号 Dwg.No.	

未盖技术出图章 本图纸无效
This drawing is valid only after being stamped and released by the R&D

利用 pdfFactory Pro 测试版本创建的PDF文档 www.pdffactory.com

install Wall panel for the walkway

1. Fix the bottom groove and outside Alu. Angle
2. Fix the inside alu. angle after adjusted the position of the wall panel
3. Install the double door
4. Install the walkway wall panel before the staircase

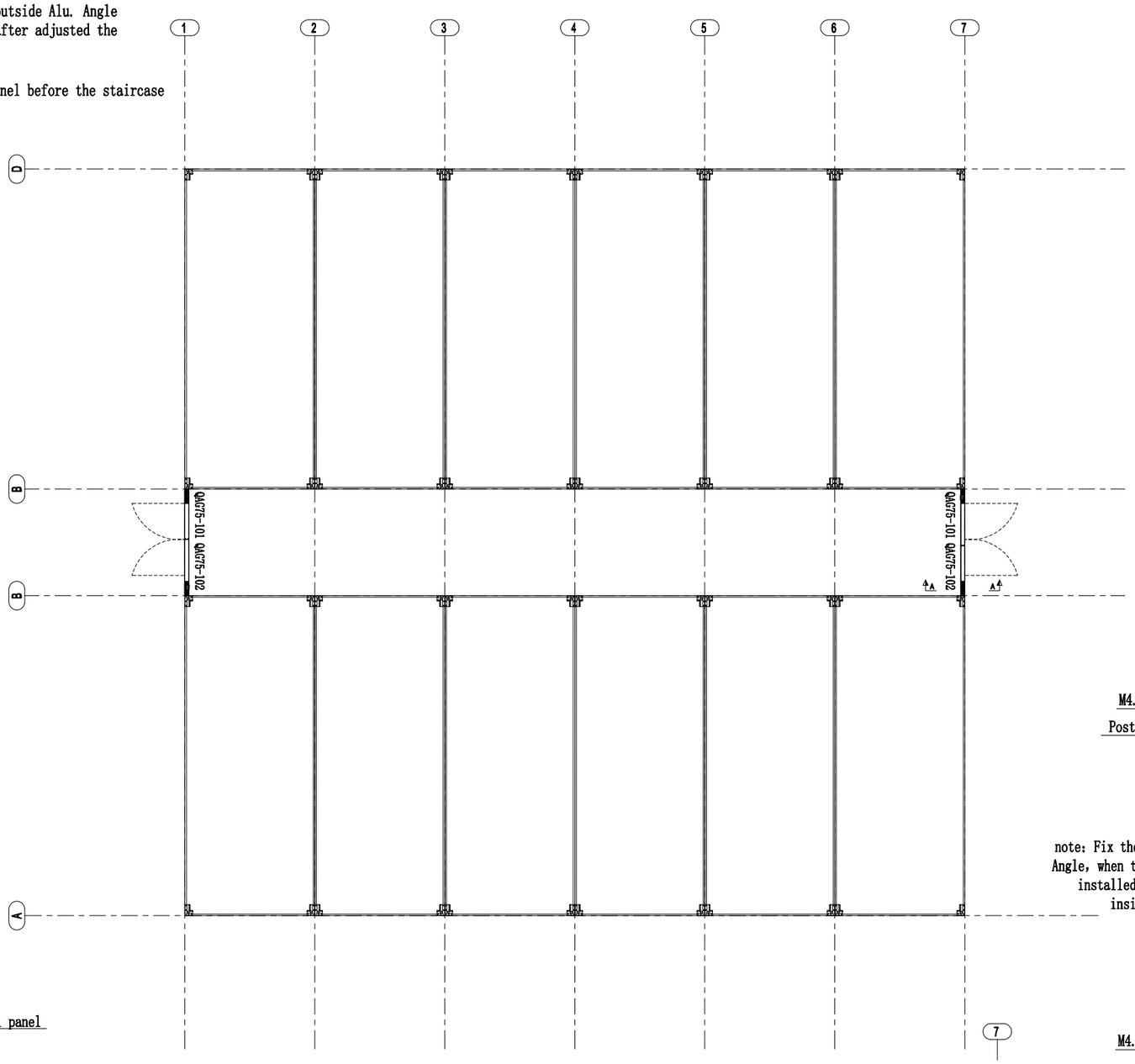

走道Wall panel布置

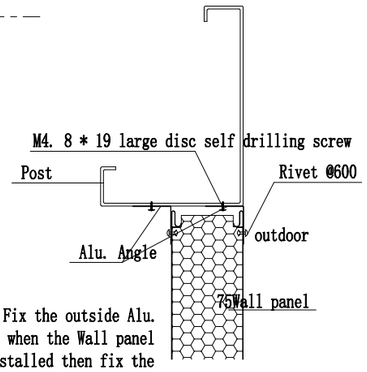

note: Fix the outside Alu. Angle, when the Wall panel installed then fix the inside Alu. Angle

walkway wall panel installation-side

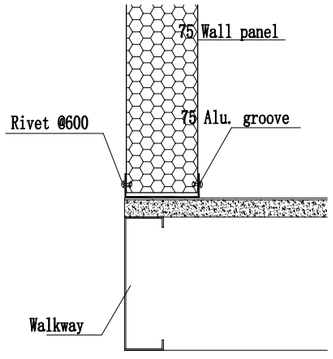

Wall panel of the walkway install

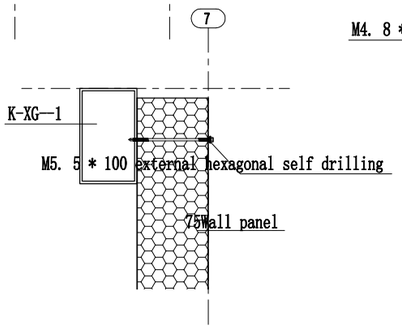

1F / 2F walkway wall panel installation-Top
A-A

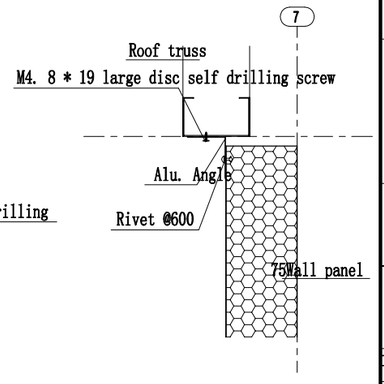

3F walkway wall panel installation- top
A-A

会签	
建筑	
结构	
给排水	
电力	
暖通	
动力	

Copyright 2016.

This drawing remains the property of Hangzhou xixi Buildings Co.,Ltd, it may only be used for the purpose for which it was commissioned & in accordance with the terms of engagement for that commission. Unauthorized use of this drawing is prohibited.

CUSTOMIZED BUILDINGS

Hangzhou Xixi Building Co., LTD

Mr. Cancan Kang
Cell Phone & WhatsApp & Viber: 008613757163354
QQ & WeChat: 66048573 Email: cancancbc@qq.com
Add.: 20th Floor, Xinyi Guangchang, Xiaoshan, Hangzhou,

版本 Rev.	修改内容 Description	日期 Date	发布人 who send

证书等级	
证书编号	

合作设计单位
Cooperative Designer

工序 Process	签名 Signature	日期 Date
审定 Authorized By		
审核 Verified By		
项目负责人 Process		
校对人 Checked By		
设计 Designed By		
制图 Drawn By		

执业签章
Engineer Signature

出图签章
Engineer Signature

项目名称
Project Name

图名
Title

走道Wall panel安装

工程编号 Title	#878	专业 Title	JZ
比例 Scale		图号 Dwg.No.	

未盖技术出图章 本图纸无效
This drawing is valid only after being stamped and released by the R&D

利用 pdfFactory Pro 测试版本创建的PDF文档 www.pdffactory.com

会签	
建筑	
结构	
给排水	
电力	
暖通	
动力	

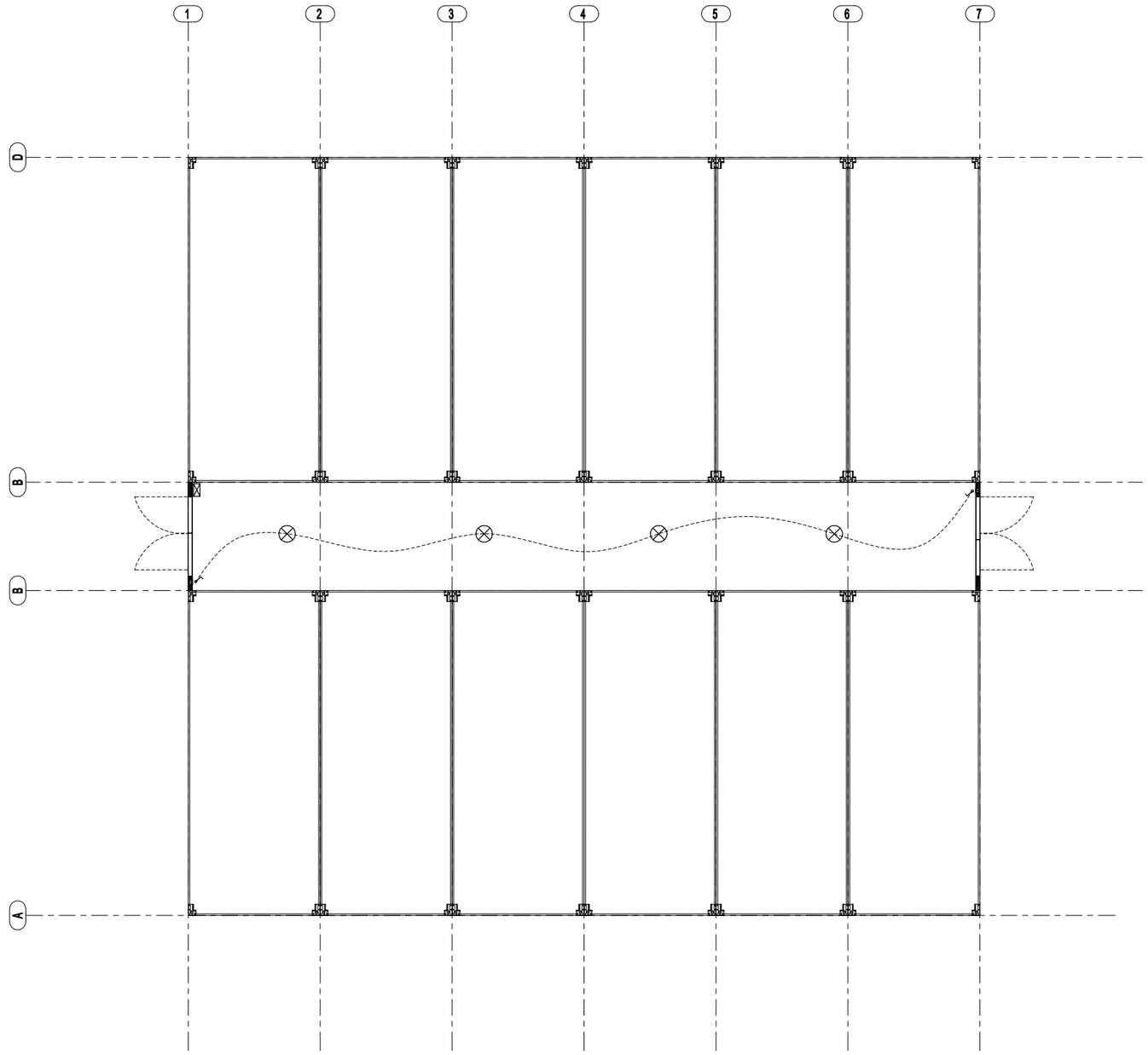

Electrical system layout in the walkway

8 circuit surface mounted DB
Inlet
1P25A Air switch with protection
2*1.5² Single core wire+ø20PVC conduit
Light

Electrical system in the walkway

Copyright 2016.
This drawing remains the property of Hangzhou xixi Buildings Co.,Ltd, it may only be used for the purpose for which it was commissioned & in accordance with the terms of engagement for that commission. Unauthorized use of this drawing is prohibited.

CUSTOMIZED BUILDINGS

Hangzhou Xixi Building Co., LTD
Mr. Cancan Kang
Cell Phone & WhatsApp & Viber: 008613757163354
QQ & WeChat: 66048573 Email: cancancbc@qq.com
Add.: 20th Floor, Xinyi Guangchang, Xiaoshan, Hangzhou,

版本 Rev.	修改内容 Description	日期 Date	发布人 who send

证书等级	
证书编号	

合作设计单位
Cooperative Designer

工序 Process	签名 Signature	日期 Date
审定 Authorized By		
审核 Verified By		
项目负责人 Process		
校对人 Checked By		
设计 Designed By		
制图 Drawn By		

执业签章
Engineer Signature

出图签章
Engineer Signature

项目名称
Project Name

图名 Title
走道电力布置

工程编号 Title	#878	专业 Title	JZ
比例 Scale		图号 Dwg.No.	

未盖技术出图章 本图纸无效
This drawing is valid only after being stamped and released by the R&D

利用 pdfFactory Pro 测试版本创建的PDF文档 www.pdffactory.com

Ceiling for the walkway

1. refer to the ceiling layout
2. Use M5. 5 * 25 external hexagonal self drilling screw to fix the ceiling

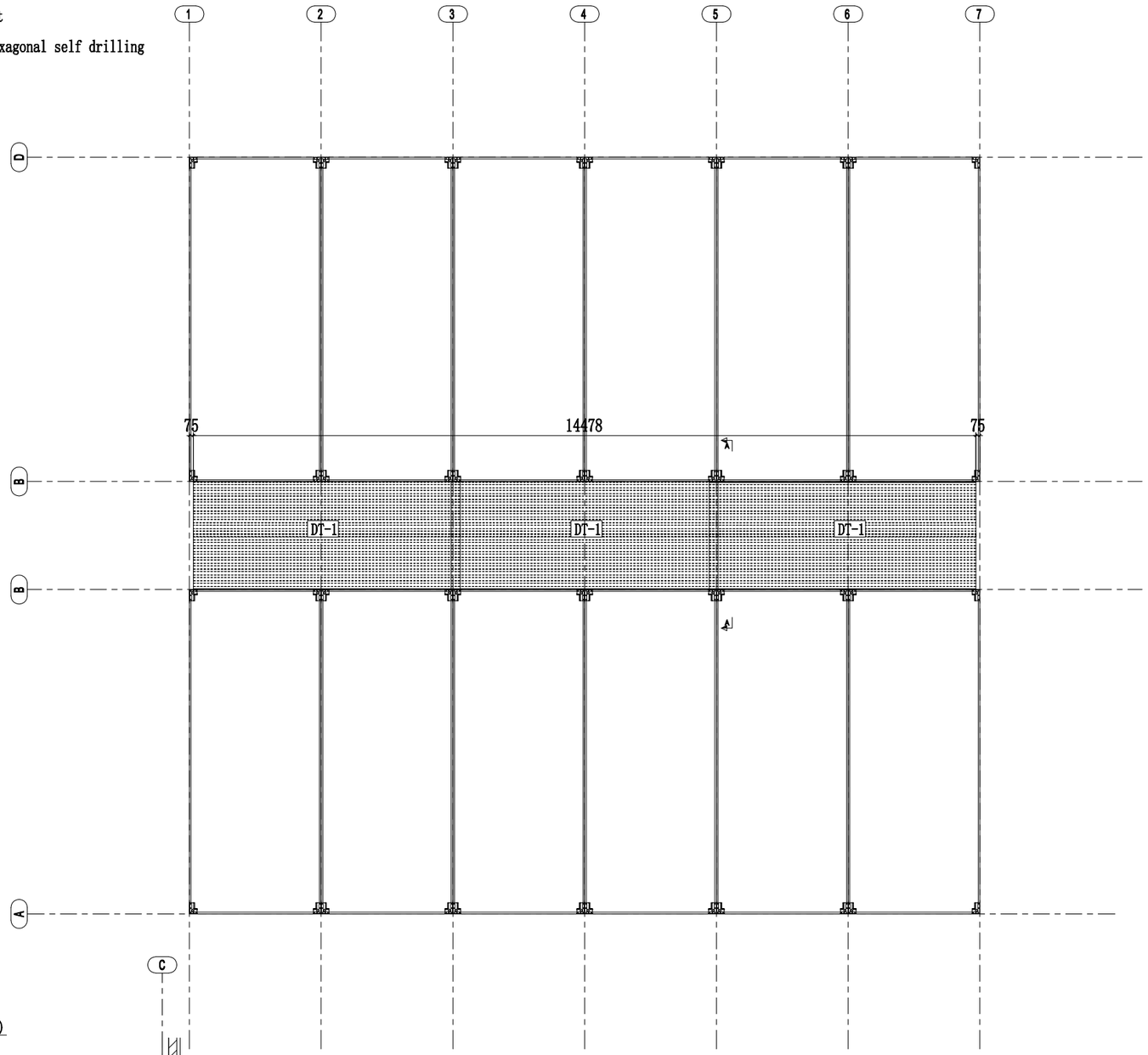

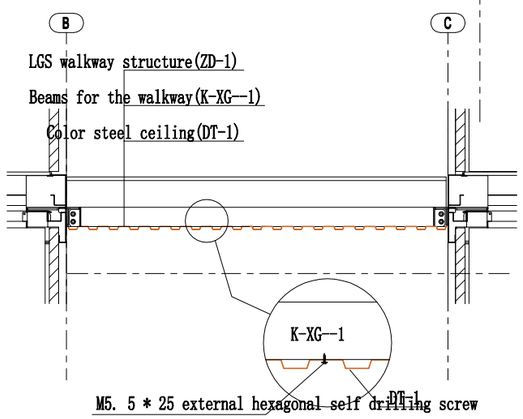

Ceiling for the walkway
A-A

会签	
建筑	
结构	
给排水	
电力	
暖通	
动力	

Copyright 2016.
This drawing remains the property of Hangzhou xixi Buildings Co.,Ltd, it may only be used for the purpose for which it was commissioned & in accordance with the terms of engagement for that commission. Unauthorized use of this drawing is prohibited.

CUSTOMIZED BUILDINGS

Hangzhou Xixi Building Co., LTD
Mr. Cancan Kang
Cell Phone & WhatsApp & Viber: 00861375716335 4
QQ & WeChat: 66048573 Email: cancancbc@qq.com
Add.: 20th Floor, Xinyi Guangchang, Xiaoshan, Hangzhou,

版本 Rev.	修改内容 Description	日期 Date	发布人 who send

证书等级

证书编号

合作设计单位
Cooperative Designer

工序 Process	签名 Signature	日期 Date
审定 Authorized By		
审核 Verified By		
项目负责人 Process		
校对人 Checked By		
设计 Designed By		
制图 Drawn By		

执业签章
Engineer Signature

出图签章
Engineer Signature

项目名称
Project Name

图名 Title: 走道吊顶安装

工程编号 Title	#878	专业 Title	JZ
比例 Scale		图号 Dwg.No.	

未盖技术出图章 本图纸无效
This drawing is valid only after being stamped and released by the R&D

利用 pdfFactory Pro 测试版本创建的PDF文档 www.pdffactory.com

会签		
建筑	结构	给排水
电力	暖通	动力

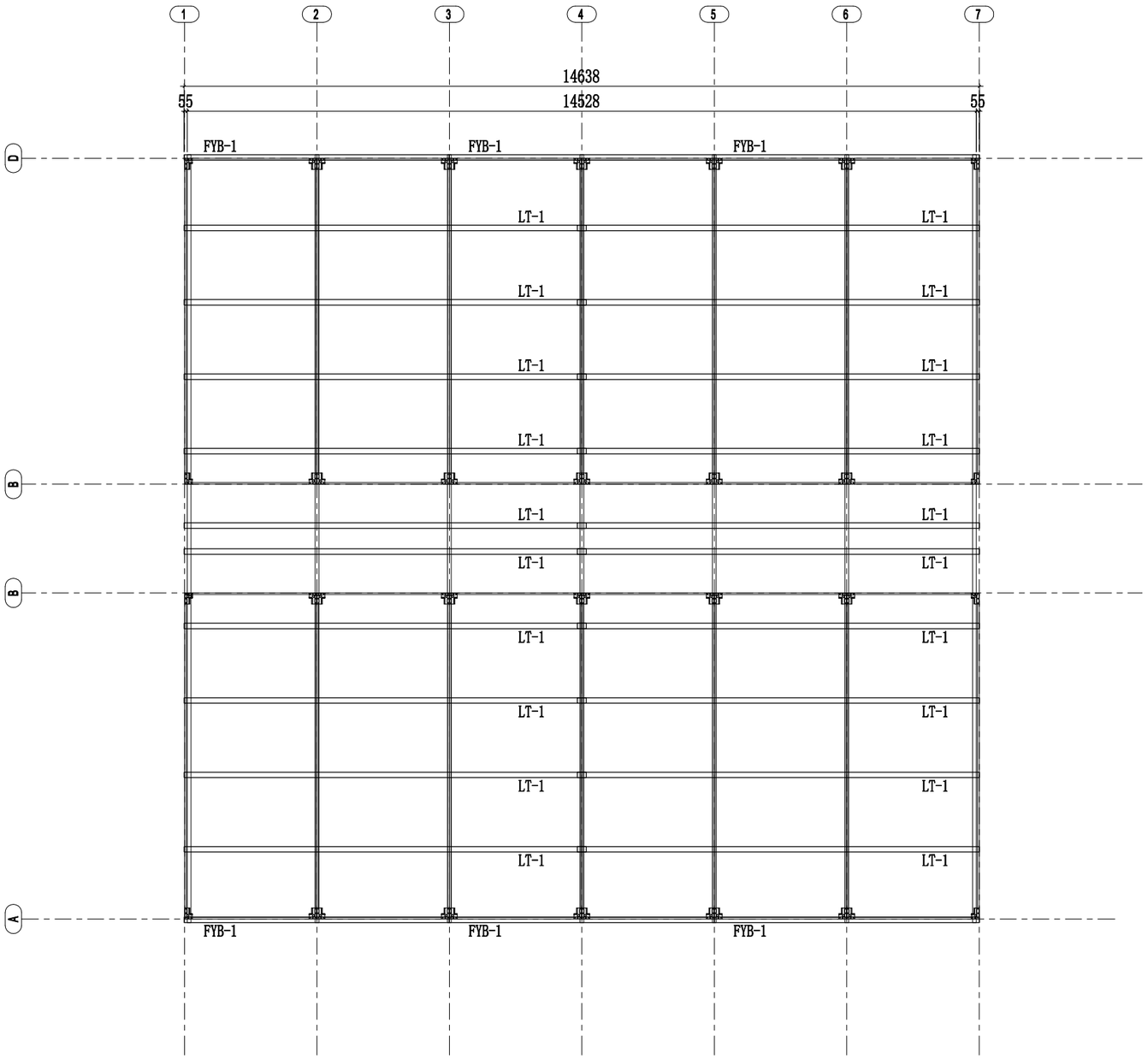

Roof purlin installation

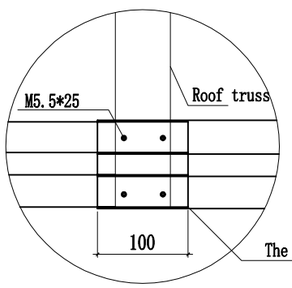

Purlin lap joint

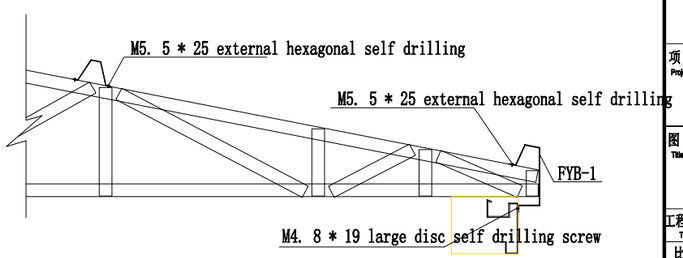

Purlin installation node

Copyright 2016.
This drawing remains the property of Hangzhou xixi Buildings Co.,Ltd, It may only be used for the purpose for which it was commissioned & in accordance with the terms of engagement for that commission. Unauthorized use of this drawing is prohibited.

CUSTOMIZED BUILDINGS

Hangzhou Xixi Building Co., LTD
Mr. Cancan Kang
Cell Phone & WhatsApp & Viber: 008613757163354
QQ & WeChat: 66048573 Email: cancancbc@qq.com
Add.: 20th Floor, Xinyi Guangchang, Xiaoshan, Hangzhou,

版本 Rev.	修改内容 Description	日期 Date	发布人 who send

证书等级	
证书编号	

合作设计单位
Cooperative Designer

工序 Process	签名 Signature	日期 Date
审定 Authorized By		
审核 Verified By		
项目负责人 Process		
校对人 Checked By		
设计 Designed By		
制图 Drawn By		

执业签章
Engineer Signature

出图签章
Engineer Signature

项目名称
Project Name

图名 Title
屋面檩条安装

工程编号 Title	#878	专业 Title	JZ
比例 Scale		图号 Dwg.No.	

未盖技术出图章 本图纸无效
This drawing is valid only after being stamped and released by the R&D

利用 pdfFactory Pro 测试版本创建的PDF文档 www.pdffactory.com

会签		
建筑	结构	给排水
电力	暖通	动力

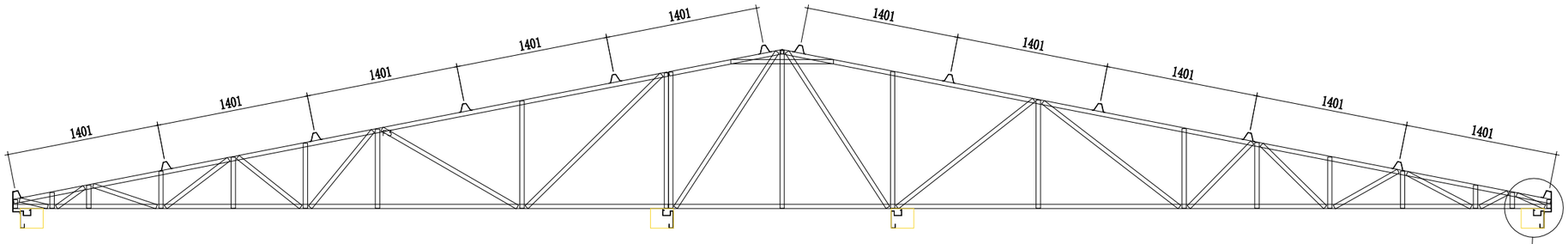

Roof purlin layout

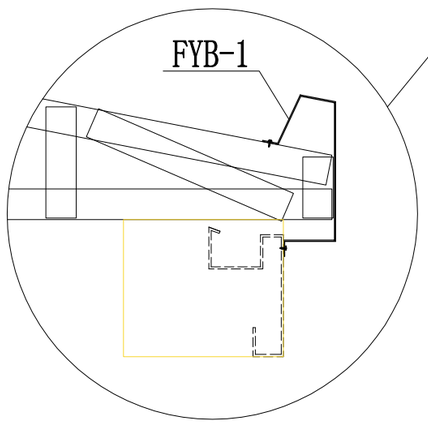

Copyright 2016.

This drawing remains the property of Hangzhou xbd Buildings Co.,Ltd, It may only be used for the purpose for which it was commissioned & in accordance with the terms of engagement for that commission. Unauthorized use of this drawing is prohibited.

CUSTOMIZED BUILDINGS

Hangzhou Xixi Building Co., LTD

Mr. Cancan Kang
Cell Phone & WhatsApp & Viber: 008613757163354
QQ & WeChat: 66048573 Email: cancancbc@qq.com
Add.: 20th Floor, Xinyi Guangchang, Xiaoshan, Hangzhou,

版本 Rev.	修改内容 Description	日期 Date	发布人 who send

证书等级	
证书编号	

合作设计单位
Cooperative Designer

工序 Process	签名 Signature	日期 Date
审定 Authorized By		
审核 Verified By		
项目负责人 Process		
校对人 Checked By		
设计 Designed By		
制图 Drawn By		

执业签章
Engineer Signature

出图签章
Engineer Signature

项目名称
Project Name

图名 Title

檩条布置

工程编号 Title	#878	专业 Title	JZ
比例 Scale		图号 Dwg.No.	

未盖技术出图章 本图纸无效
This drawing is valid only after being stamped and released by the R&D

利用 pdfFactory Pro 测试版本创建的PDF文档 www.pdffactory.com

会签	
建筑	
结构	
给排水	
电力	
暖通	
动力	

Layout of gable wall panel

1. Install the gable wall panel before the roof panel
2. Install the flashing before the gable wall panel
3. Use M4. 8 * 19 large disc self drilling screw to fix the flashing
4. Use M5. 5 * 25 external hexagonal self drilling screw to fix the gable wall panel

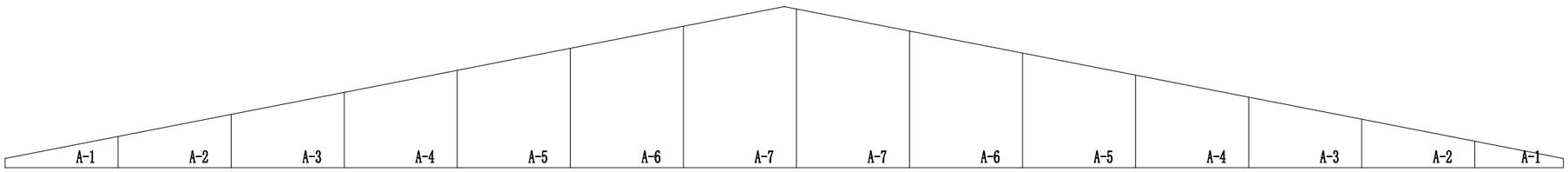

Layout of gable wall panel

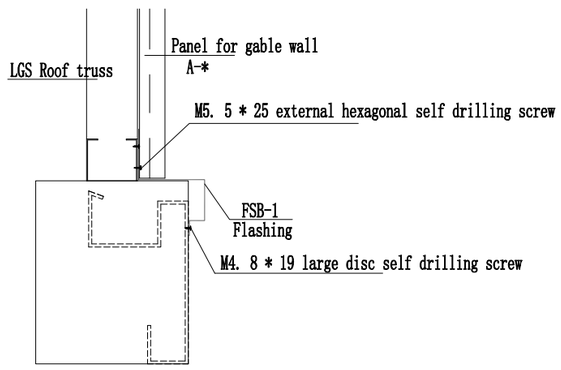

Gable wall flashing installation node

Copyright 2016.
This drawing remains the property of Hangzhou xbd Buildings Co.,Ltd, It may only be used for the purpose for which it was commissioned & in accordance with the terms of engagement for that commission. Unauthorized use of this drawing is prohibited.

CUSTOMIZED BUILDINGS

Hangzhou Xixi Building Co., LTD
Mr. Cancan Kang
Cell Phone & WhatsApp & Viber: 008613757163354
QQ & WeChat: 66048573 Email: cancancbc@qq.com
Add.: 20th Floor, Xinyi Guangchang, Xiaoshan, Hangzhou,

版本 Rev.	修改内容 Description	日期 Date	发布人 who send

证书等级	
证书编号	

合作设计单位
Cooperative Designer

工序 Process	签名 Signature	日期 Date
审定 Authorized By		
审核 Verified By		
项目负责人 Process		
校对人 Checked By		
设计 Designed By		
制图 Drawn By		

执业签章
Engineer Signature

出图签章
Engineer Signature

项目名称
Project Name

图名
Title
山墙封板布置

工程编号 Title	#878	专业 Title	JZ
比例 Scale		图号 Dwg.No.	

未盖技术出图章 本图纸无效
This drawing is valid only after being stamped and released by the R&D

利用 pdfFactory Pro 测试版本创建的PDF文档 www.pdffactory.com

会签	
建筑	
结构	
给排水	
电力	
暖通	
动力	

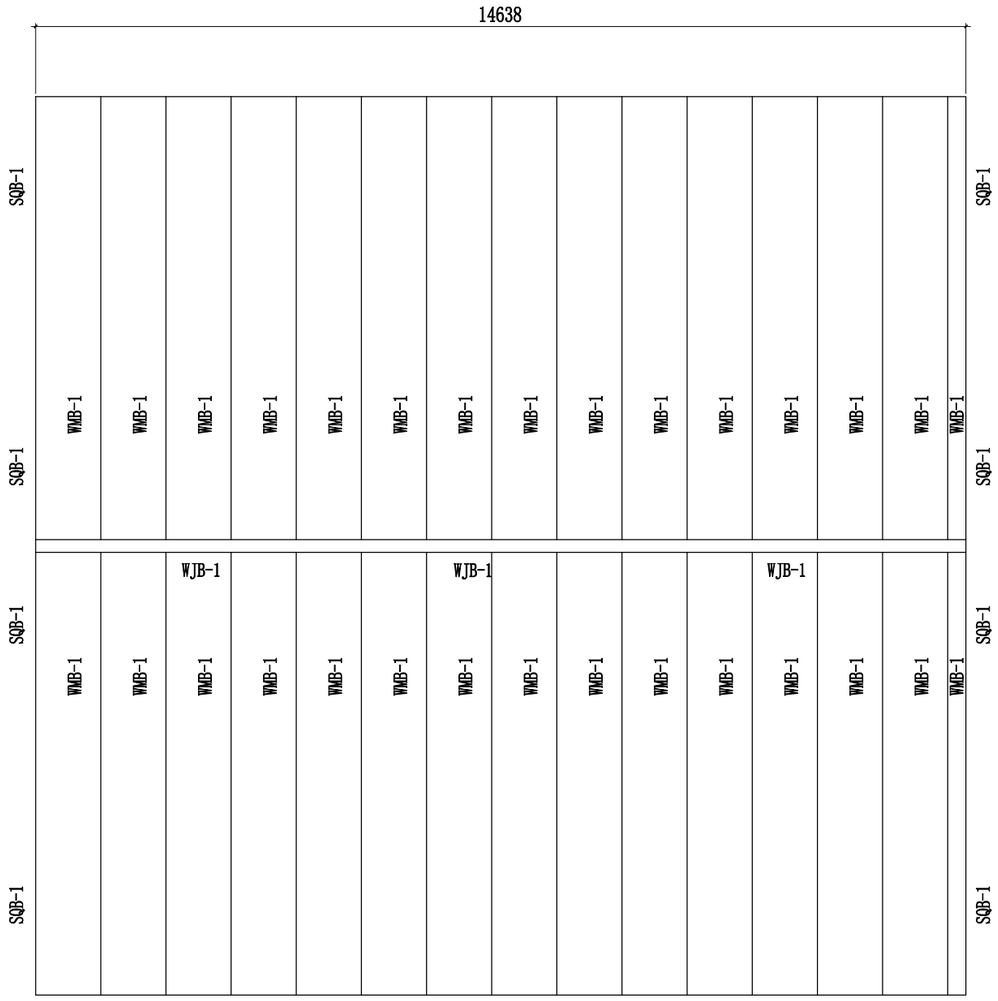

Roof panel layout

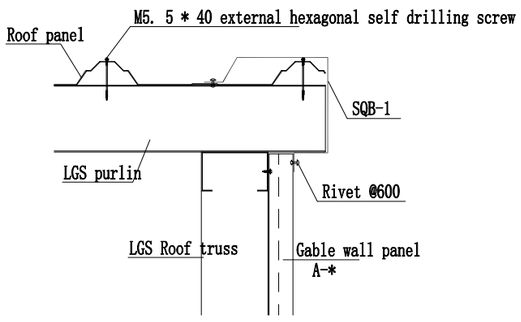

Gable wall flashing installation

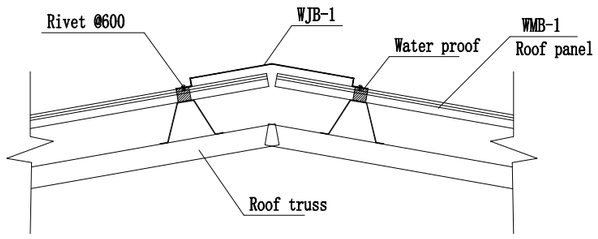

Ridge flashing installation

Copyright 2016.
This drawing remains the property of Hangzhou xixi Buildings Co.,Ltd, It may only be used for the purpose for which it was commissioned & in accordance with the terms of engagement for that commission. Unauthorized use of this drawing is prohibited.

CUSTOMIZED BUILDINGS

Hangzhou Xixi Building Co., LTD
Mr. Cancan Kang
Cell Phone & WhatsApp & Viber: 008613757163354
QQ & WeChat: 66048573 Email: cancancbc@qq.com
Add.: 20th Floor, Xinyi Guangchang, Xiaoshan, Hangzhou,

版本 Rev.	修改内容 Description	日期 Date	发布人 who send

证书等级	
证书编号	

合作设计单位
Cooperative Designer

工序 Process	签名 Signature	日期 Date
审定 Authorized By		
审核 Verified By		
项目负责人 Process		
校对人 Checked By		
设计 Designed By		
制图 Drawn By		

执业签章
Engineer Signature

出图签章
Engineer Signature

项目名称
Project Name

图名 Title
屋面瓦安装

工程编号 Title	#878	专业 Title	JZ
比例 Scale		图号 Dwg.No.	

未盖技术出图章 本图纸无效
This drawing is valid only after being stamped and released by the R&D

利用 pdfFactory Pro 测试版本创建的PDF文档 www.pdffactory.com